REV.	DATE	DESCRIPTION
A	10/28/99	MODIFY BODY AND CONTACT DIMS
B	01/13/03	ADD INSULATOR / UPDATE DIMENSIONS

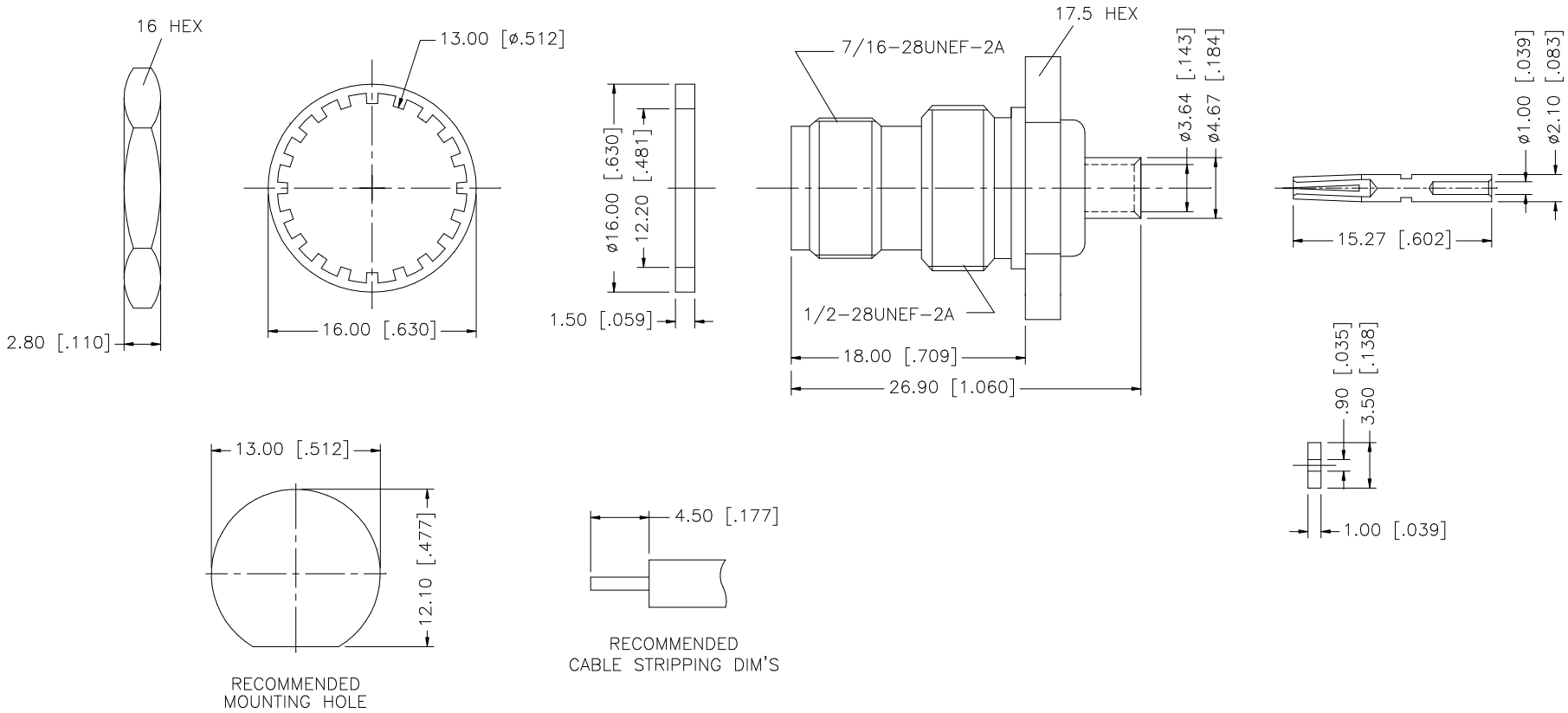

	DESCRIPTION	MATERIAL	FINISH	QTY
8	GASKET	RUBBER	RED	1
7	LOCK WASHER	BRASS	NICKEL	1
6	HEX NUT	BRASS	NICKEL	1
5	BARREL	BRASS	GOLD	1
4	CONTACT PIN	PHOS. BRONZE	GOLD	1
3	INSULATOR	TEFLON	NATURAL	2
2	REAR BODY	BRASS	GOLD	1
1	BODY	BRASS	NICKEL	1

UNLESS OTHERWISE SPECIFIED DIMENSIONS ARE IN MILLIMETERS. DIMENSIONS IN [ ] ARE IN INCHES AND FOR CUSTOMER REFERANCE ONLY.

UNLESS OTHERWISE SPECIFIED TOLERANCES FOR MILLIMETERS ARE:
0.5 – 8mm ± 0.20mm
8 – 30mm ± 0.40mm
30 – 120mm ± 0.50mm

UNLESS OTHERWISE SPECIFIED TOLERANCES FOR INCHES ARE:
.020 – .315 = ± 0.007"
.315 – 1.180 = ± 0.015"
1.180 – 4.724 = ± 0.020"

DO NOT SCALE DRAWING

APPROVALS		DATE
DRAWN	G.R.S.	01/13/03
CHECKED		
ISSUED		
SHEET	1 OF 1	

CAD FILE C:/122/122401DWG

Amphenol Connex

PART DESCRIPTION
TNC BULKHEAD DIRECT SOLDER JACK
.141" SIMI RIGID CABLE

PART NO. 122401

DWG. NO.	REV.	SIZE	SCALE
122401.DWG	B	A	NA