SP211EH/213EH

High Speed +5V High Performance RS-232 Transceivers

- Single +5V Supply Operation
- 0.1µF External Charge Pump Capacitors
- 500kbps Data Rate Under Load
- Standard SOIC and SSOP Footprints
- Lower Supply Current Than Competition (typical 3mA)
- 1µA Shutdown Mode
- Wake-Up Feature in Shutdown Mode
- Tri-State Receiver Outputs
- Ideal for High Speed RS-232 Applications
- Improved ESD Specifications:
  ±15kV Human Body Model
  ±15kV IEC 61000-4-2 Air Discharge
  ±8kV IEC 61000-4-2 Contact Discharge

Now Available in Lead Free Packaging

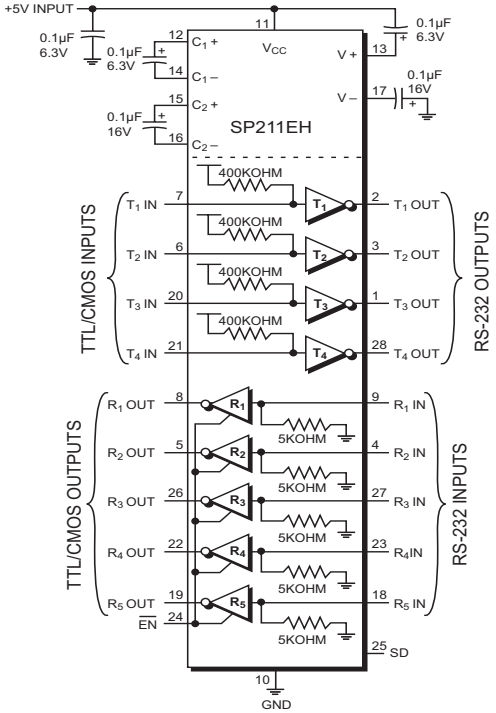

DESCRIPTION

The **SP211EH/213E**H devices are high speed enhanced multi-channel RS-232 line transceivers with improved electrical performance. The **SP211EH/213E**H series is a superior drop-in replacement to our previous versions as well as popular industry standards. All devices feature very low power CMOS construction and the Exar-patented (5,306,954) on-board charge pump circuitry that generates the +/-10V RS-232 voltage levels using 0.1µF charge pump capacitors. The **SP211EH** and **SP213EH** devices feature a low-power shutdown mode, which reduces power supply drain to 1µA. Enhancements to this series include a higher transmission rate of 500kbps, a lower power supply current at 3mA typical (no load), and superior ESD performance. The ESD tolerance has been improved for this series to over +/-15kV for both Human Body Model and IEC61000-4-2 Air Discharge test methods.

Model	No. of RS-232		No. of Receivers Active in Shutdown	No. of External 0.1µF Capacitors	Shutdown	Wake-Up	TTL Tri-State
	Drivers	Receivers					
SP211EH	4	5	0	4	Yes	No	Yes
SP213EH	4	5	2	4	Yes	Yes	Yes

Table 1. Model Selection Table

ABSOLUTE MAXIMUM RATINGS

These are stress ratings only and functional operation of the device at these or any other above those indicated in the operation sections of the specifications below is not implied. Exposure to absolute maximum rating conditions for extended periods of time may affect reliability.

V_{CC} .....+6V
V^+ ..... (V_{CC} – 0.3V) to +13.2V
V^- 13.2V
Input Voltages
T_{IN} ..... –0.3V to (V_{CC} +0.3V)
R_{IN} .....±20V
Output Voltages
T_{OUT} ..... (V^+, +0.3V) to (V^-, –0.3V)
R_{OUT} ..... –0.3V to (V_{CC} +0.3V)
Short Circuit Duration on T_{OUT} ..... Continuous

Power Dissipation Per Package
28-pin SSOP (derate 11.2mW/°C above +70°C)....900mW
28-pin SOIC (derate 12.7mW/°C above +70°C)...1000mW

SPECIFICATIONS

V_{CC} at nominal ratings; 0.1µF charge pump capacitors; T_{MIN} to T_{MAX}, unless otherwise noted.

PARAMETER	MIN.	TYP.	MAX.	UNIT	CONDITIONS
TTL INPUTS					T_{IN}, EN, SD
Logic Threshold V_{IL}			0.8	Volts	
Logic Threshold V_{IH}	2.0			Volts	
Logic Pull-Up Current		15	200	µA	T_{IN} = 0V
Maximum Transmission Rate	480			kbps	C_L = 1000pF, R_L = 3kΩ
TTL OUTPUTS					
Compatibility		TTL/CMOS			
V_{OL}			0.4	Volts	I_{OUT} = 3.2mA: Vcc = +5V
V_{OH}	3.5			Volts	I_{OUT} = -1.0mA
Leakage Current		0.05	+/-10	µA	0V ≤ V_{OUT} ≤ Vcc; SP211EH $\overline{EN}$ = 0V; SP213EH EN = Vcc, T_A = +25ºC
RS-232 OUTPUT					
Output Voltage Swing	+/-5	+/-7		Volts	All transmitter outputs loaded with 3kΩ to ground
Output Resistance	300			Ω	Vcc = 0V; V_{OUT} = +/-2V
Output Short Circuit Current		+/-25		mA	Infinite Duration, V_{OUT} = 0V
RS-232 INPUT					
Voltage Range	-15		+15	Volts	
Voltage Threshold Low	0.8	1.2		Volts	Vcc = 5V, T_A = +25ºC
Voltage Threshold High		1.7	2.8	Volts	Vcc = 5V, T_A = +25ºC
Hysteresis	0.2	0.5	1.0	Volts	Vcc = 5V
Resistance	3	5	7	kΩ	V_{IN} = +/-15V, T_A = +25ºC
DYNAMIC CHARACTERISTICS					
Driver Propagation Delay		250		ns	TTL to RS-232
Receiver Propagation Delay		200	500	ns	RS-232 to TTL
Instantaneous Slew Rate			TBD	V/µs	C_L = 2500pF, R_L = 3kΩ; T_A = +25ºC; from +/-3V

SPECIFICATIONS

V_{CC} at nominal ratings; 0.1µF charge pump capacitors; T_{MIN} to T_{MAX}, unless otherwise noted.

PARAMETER	MIN.	TYP.	MAX.	UNIT	CONDITIONS
DYNAMIC CHARACTERISTICS continued					
Transition Time			TBD	µs	C_L = 2500pF, R_L = 3kΩ, Measured from -3V to +3V or +3V to -3V
Output Enable Time		400		ns	
Output Disable Time		250		ns	
POWER REQUIREMENTS					
Vcc	4.50	5.00	5.50	Volts	
Icc		3	6	mA	No Load: Vcc = +/-10%
Icc		15		mA	All Transmitters R_L = 3kΩ
Shutdown Current		1	10	µA	T_A = +25ºC
ENVIRONMENTAL AND MECHANICAL					
Operating Temperature					
Commercial, _C	0		+70	ºC	
Extended, _E	-40		+85	ºC	
Storage Temperature	-65		+125	ºC	
Package _A _T	Shrink (SSOP) small outline Wide (SOIC) small outline				

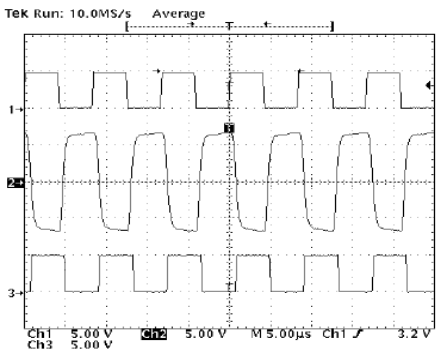

Transmitter Output @ 240kbps
R_L=3KΩ, C_L=1,000pF

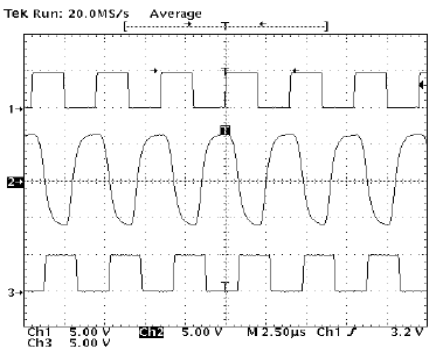

Transmitter Output @ 500kbps
R_L=3KΩ, C_L=1,000pF

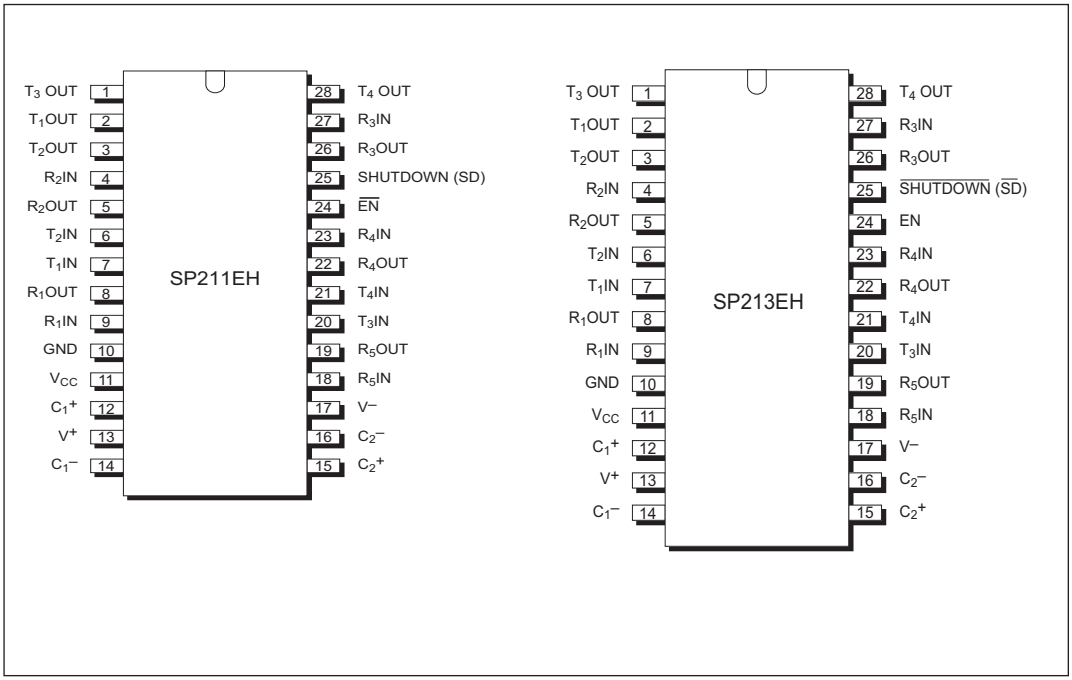
SP211EH
T3 OUT 1
T1OUT 2
T2OUT 3
R2IN 4
R2OUT 5
T2IN 6
T1IN 7
R1OUT 8
R1IN 9
GND 10
VCC 11
C1+ 12
V+ 13
C1− 14
28 T4 OUT
27 R3IN
26 R3OUT
25 SHUTDOWN (SD)
24 EN
23 R4IN
22 R4OUT
21 T4IN
20 T3IN
19 R5OUT
18 R5IN
17 V−
16 C2−
15 C2+
SP213EH
T3 OUT 1
T1OUT 2
T2OUT 3
R2IN 4
R2OUT 5
T2IN 6
T1IN 7
R1OUT 8
R1IN 9
GND 10
VCC 11
C1+ 12
V+ 13
C1− 14
28 T4 OUT
27 R3IN
26 R3OUT
25 SHUTDOWN (SD)
24 EN
23 R4IN
22 R4OUT
21 T4IN
20 T3IN
19 R5OUT
18 R5IN
17 V−
16 C2−
15 C2+

FEATURES

As in the original RS-232 multi-channel products, the **SP211EH** and **SP213EH** high speed multi–channel RS-232 line transceivers provide a variety of configurations to fit most designs, especially high speed applications where +/-12V is not available. The **SP211EH/213EH** is a superior high speed drop-in replacement to our previous versions as well as popular industry standards.

All devices in this series feature low–power CMOS construction and **Exar's**–proprietary on-board charge pump circuitry to generate the RS-232 signal voltages. The ability to use 0.1µF charge pump capacitors saves board space and reduces production costs. The devices in this series provide different driver/receiver combinations to match any application requirement.

The **SP211EH** and **SP213EH** models feature a low–power shutdown mode, which reduces power supply drain to 1µA. The **SP213EH** includes a Wake-Up function which keeps two receivers active in the shutdown mode, unless disabled by the EN pin.

The family is available in 28 SOIC (wide) and SSOP (shrink) small outline packages. Devices can be specified for commercial (0˚C to +70˚C) and industrial/extended (–40˚C to +85˚C) operating temperatures.

THEORY OF OPERATION

The **SP211EH** and **SP213EH** devices are made up of three basic circuit blocks — 1) transmitter/driver, 2) receiver and 3) the **EXAR**–proprietary charge pump. Each model within the series incorporates variations of these circuits to achieve the desired configuration and performance.

Transmitter/Drivers

The drivers of this series can maintain a typical data rate of 500kbps. This superior RS-232 data transmission rate makes the **SP211EH/213EH** series an ideal match for many designs in personal computer peripherals and LAN applications that demand high speed performance.

The drivers are inverting transmitters, which accept either TTL or CMOS inputs and output the RS-232 signals with an inverted sense relative to the input logic levels. Typically, the RS-232 output voltage swing is +/-9V with no load, and +/-5V minimum with full load. The transmitter outputs are protected against infinite short–circuits to ground without degradation in reliability. The drivers of the **SP211EH**, and **SP213EH** can be tri–stated by using the SHUTDOWN function.

In the "power-off" state, the output impedance will remain greater than 300 ohms, again satisfying the RS-232 specifications. Should the input of the driver be left open, an internal 400k ohm pull-up resistor to V_{CC} forces the input high, thus committing the output to a low state. The slew rate of the transmitter output is internally limited to a maximum of 30V/µs in order to meet the EIA/RS-232 and ITU V.28 standards. The transition of the output from high to low also meets the monotonicity requirements of the standard.

Receivers

The high performance receivers of the **SP211EH/213EH** devices can accept input signals at a typical data rate or 500kbps. The receivers convert RS-232 level input signals to inverted TTL level signals. Since the input is usually from a transmission line where long cable lengths and system interference can degrade the signal, the inputs have a typical hysteresis margin of 500mV. This ensures that the receiver is virtually immune to noisy transmission lines. Should an input be left unconnected, a 5kΩ pull-down resistor to ground will commit the output of the receiver to a high state.

SHUTDOWN MODE

The **SP211EH** and **SP213EH** both feature a control input which will disable the device and reduce power supply to less than 10µA, making the parts ideal for battery-powered systems. In the "shutdown" mode the receivers and transmitters will both be tri-stated. The V+ output of the charge pump will discharge to Vcc and the V- output will discharge to ground.

For complete shutdown to occur and the 10µA power drain to be realized, the following conditions must be met:

SP211EH:

- +5V must be applied to the SD pin.
- ENABLE must be either 0V, +5V or not connected
- the transmitter inputs must be either +5.0V or not connected
- Vcc must be +5V
- Receiver inputs must be >0V and <+5V

SP213EH:

- 0V must be applied top the $\overline{SD}$ pin
- ENABLE must be either 0V, +5.0V or not connected
- the transmitter inputs must be either +5.0V or not connected
- Vcc must be +5V
- Receiver inputs must be >0V and <+5V

ENABLE

SP211EH and **SP213EH** feature an enable input, which allows the receiver outputs to be either tri–stated or enabled. This can be especially useful when the receiver is tied directly to a shared microprocessor data bus. For the **SP211EH**, enable is active low; that is, 0V applied to the ENABLE pin will enable the receiver outputs. For the **SP213EH**, enable is active high; that is, +5V applied to the ENABLE pin will enable the receiver outputs.

WAKE-UP FUNCTION

The **SP213EH** has a wake-up feature that keeps two receivers (R4 and R5) in an enabled state when the device is in shutdown mode. With only the receivers active during shutdown, the devices draw 5-10µA of supply current.

A typical application of this function would be where a modem is interfaced to a computer in a power-down mode. The ring indicator signal from the modem could be passed through an active receiver in the **SP213EH** that is itself in the shutdown mode. The ring indicator signal would propagate through the **SP213EH** to the power management circuitry of the computer to power up the microprocessor and the **SP213EH** drivers. After the supply voltage to the **SP213EH** reaches +5.0V, the SHUTDOWN pin can be disabled, taking the **SP213EH** out of the shutdown mode.

All receivers that are active during shutdown maintain 500mV (typical) of hysteresis.

$\overline{SD}$	EN	Power Up/Down	Receiver Outputs
1	1	Up	Enable
1	0	Up	Tri-state
0	1	Down	Enable
0	0	Down	Tri-State

Table 2. SP213EH Wake-Up Truth Table

SD	$\overline{EN}$	Power Up/Down	Receiver Outputs
0	0	Up	Enable
0	1	Up	Tri-state
1	0	Down	Enable
1	1	Down	Tri-State

Table 3. SP211EH Receiver Truth Table

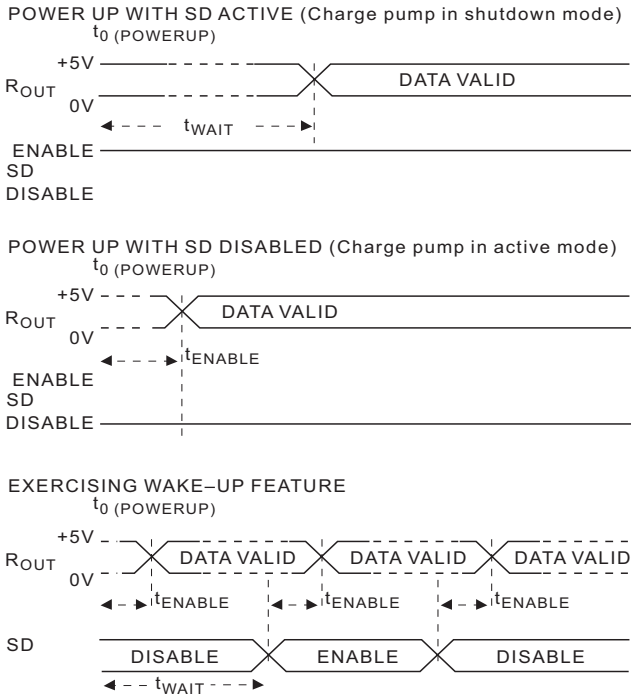

Figure 6. Wake-Up Timing

Charge–Pump

The charge pump is a **Exar**-patented design (5,306,954) and uses a unique approach compared to older less-efficient designs. The charge pumps still requires four external capacitors, but uses a four-phase voltage shifting technique to attain symmetrical 10V power supplies. Figure 3a shows the waveform found on the positive side of capacitor C2, and Figure 3b shows the negative side of capacitor C2. There is a free-running oscillator that controls the four phases of the voltage shifting. A description of each phase is as follows:

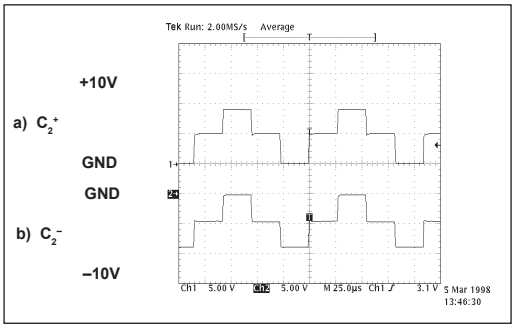

Figure 5. Typical waveforms seen on capacitor C2 when all drivers are at maximum load.

Phase 1

— V_{SS} charge storage —During this phase of the clock cycle, the positive side of capacitors C_1 and C_2 are initially charged to +5V. C_1^+ is then switched to ground and charge on C_1^- is transferred to C_2^-. Since C_2^+ is connected to +5V, the voltage potential across capacitor C_2 is now 10V.

Phase 2

— V_{SS} transfer — Phase two of the clock connects the negative terminal of C_2 to the V_{SS} storage capacitor and the positive terminal of C_2 to ground, and transfers the generated –l0V to C_3. Simultaneously, the positive side of capacitor C_1 is switched to +5V and the negative side is connected to ground.

Phase 3

— V_{DD} charge storage — The third phase of the clock is identical to the first phase — the charge transferred in C_1 produces –5V in the negative terminal of C_1, which is applied to the negative side of capacitor C_2. Since C_2^+ is at +5V, the voltage potential across C_2 is l0V.

Phase 4

— V_{DD} transfer — The fourth phase of the clock connects the negative terminal of C_2 to ground and transfers the generated l0V across C_2 to C_4, the V_{DD} storage capacitor. Again, simultaneously with this, the positive side of capacitor C_1 is switched to +5V and the negative side is connected to ground, and the cycle begins again.

Since both V+ and V^- are separately generated from V_{CC} in a no–load condition, V+ and V^- will be symmetrical. Older charge pump approaches that generate V^- from V+ will show a decrease in the magnitude of V^- compared to V+ due to the inherent inefficiencies in the design.

The clock rate for the charge pump typically operates at 15kHz. The external capacitors must be a minimum of 0.1µF with a 16V breakdown rating.

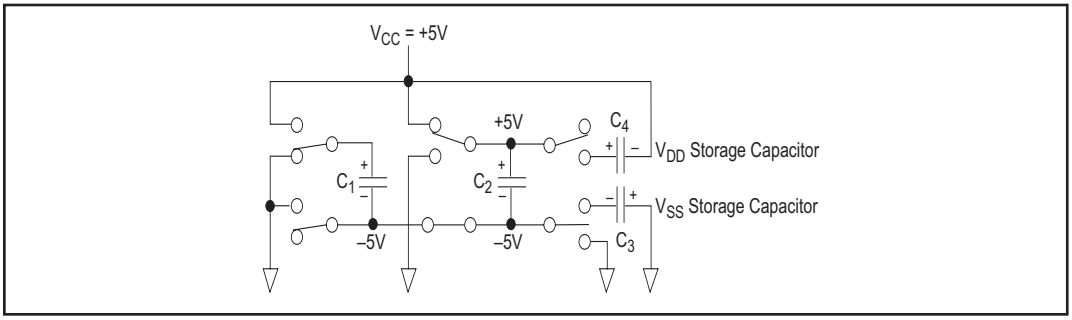

Figure 6, Charge Pump - Phase 1

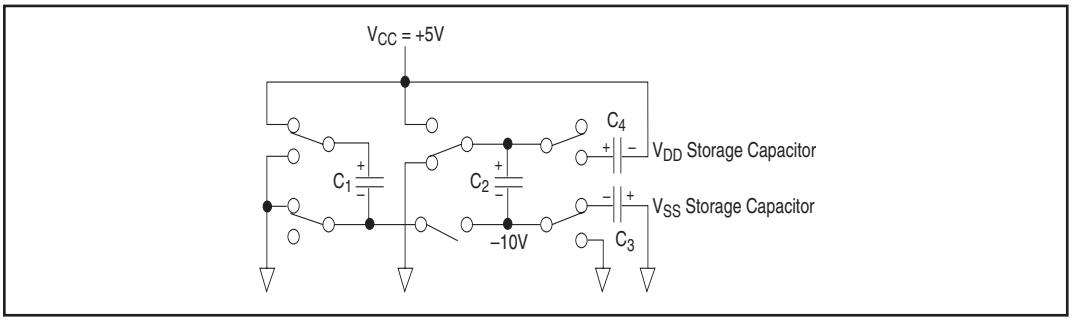

Figure 7, Charge Pump - Phase 2

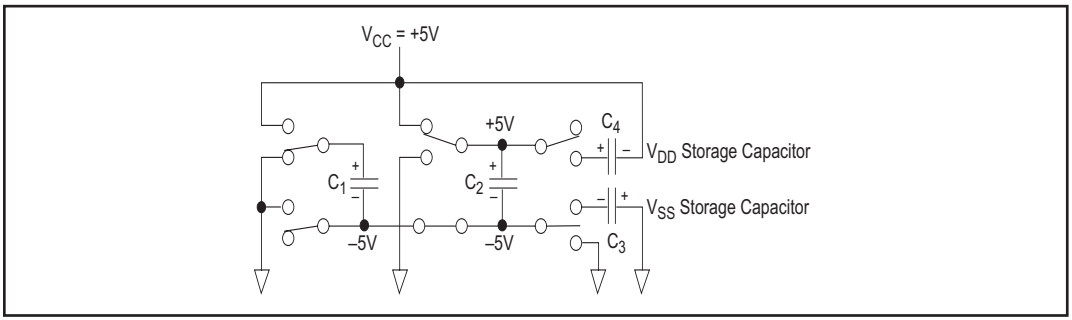

Figure 8, Charge Pump - Phase 3

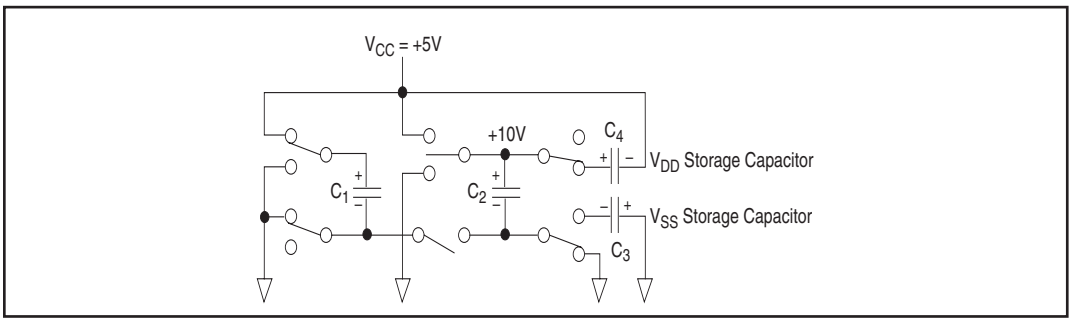

Figure 9, Charge Pump - Phase 4

ESD TOLERANCE

The **SP211EH/213EH** family incorporates ruggedized ESD cells on all driver output and receiver input pins. The ESD structure is improved over our previous family for more rugged applications and environments sensitive to electro-static discharges and associated transients. The improved ESD tolerance is at least ±15kV without damage nor latch-up.

There are different methods of ESD testing applied:

a) MIL-STD-883, Method 3015.7
b) IEC61000-4-2 Air-Discharge
c) IEC61000-4-2 Direct Contact

The Human Body Model has been the generally accepted ESD testing method for semiconductors. This method is also specified in MIL-STD-883, Method 3015.7 for ESD testing. The premise of this ESD test is to simulate the human body's potential to store electro-static energy and discharge it to an integrated circuit. The simulation is performed by using a test model as shown in Figure 10. This method will test the IC's capability to withstand an ESD transient during normal handling such as in manufacturing areas where the IC's tend to be handled frequently.

The IEC-61000-4-2, formerly IEC801-2, is generally used for testing ESD on equipment and systems. For system manufacturers, they must guarantee a certain amount of ESD protection since the system itself is exposed to the outside environment and human presence. The premise with IEC61000-4-2 is that the system is required to withstand an amount of static electricity when ESD is applied to points and surfaces of the equipment that are accessible to personnel during normal usage. The transceiver IC receives most of the ESD current when the ESD source is applied to the connector pins. The test circuit for IEC61000-4-2 is shown on Figure 11. There are two methods within IEC61000-4-2, the Air Discharge method and the Contact Discharge method.

With the Air Discharge Method, an ESD voltage is applied to the equipment under test (EUT) through air. This simulates an electrically charged person ready to connect a cable onto the rear of the system only to find an unpleasant zap just before the person touches the back panel. The high energy potential on the person discharges through an arcing path to the rear panel of the system before he or she even touches the system. This energy, whether discharged directly or through air, is predominantly a function of the discharge current rather than the discharge voltage. Variables with an air discharge such as approach speed of the object carrying the ESD potential to the system and humidity will tend to change the discharge current. For example, the rise time of the discharge current varies with the approach speed.

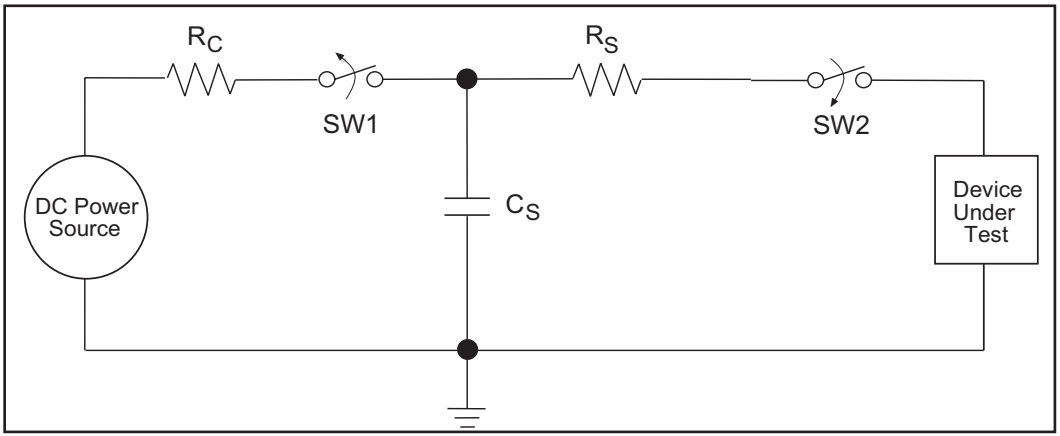

Figure 10. ESD Test Circuit for Human Body Model

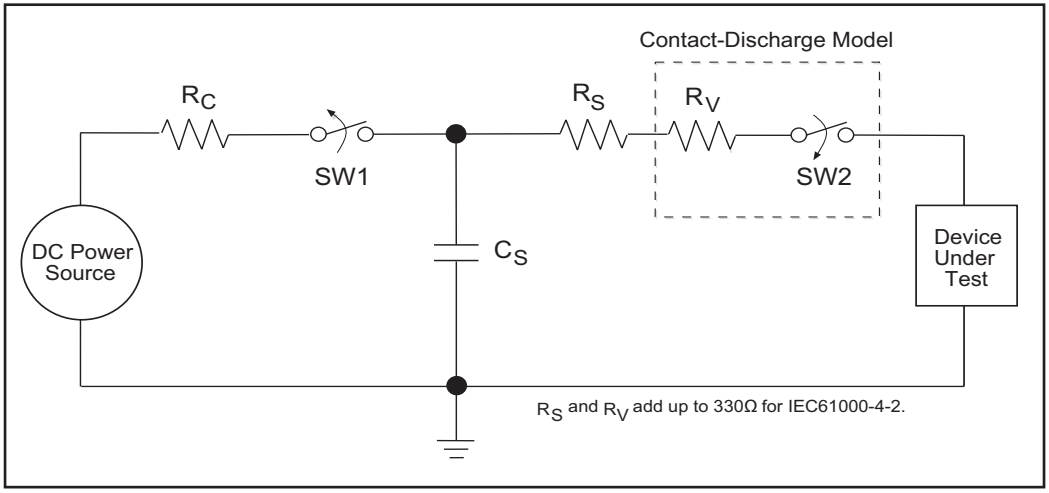

Figure 11. ESD Test Circuit for IEC61000-4-2

The Contact Discharge Method applies the ESD current directly to the EUT. This method was devised to reduce the unpredictability of the ESD arc. The discharge current rise time is constant since the energy is directly transferred without the air-gap arc. In situations such as hand held systems, the ESD charge can be directly discharged to the equipment from a person already holding the equipment. The current is transferred on to the keypad or the serial port of the equipment directly and then travels through the PCB and finally to the IC.

The circuit model in Figures 10 and 11 represent the typical ESD testing circuit used for all three methods. The C_S is initially charged with the DC power supply when the first switch (SW1) is on. Now that the capacitor is charged, the second switch (SW2) is on while SW1 switches off. The voltage stored in the capacitor is then applied through R_S, the current limiting resistor, onto the device under test (DUT). In ESD tests, the SW2 switch is pulsed so that the device under test receives a duration of voltage.

For the Human Body Model, the current limiting resistor (R_S) and the source capacitor (C_S) are 1.5kΩ an 100pF, respectively. For IEC-61000-4-2, the current limiting resistor (R_S) and the source capacitor (C_S) are 330Ω an 150pF, respectively.

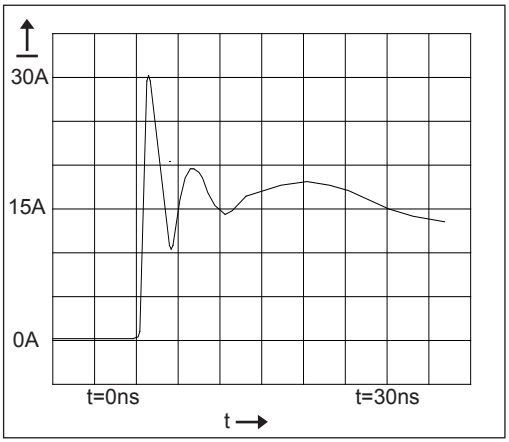

Figure 12. ESD Test Waveform for IEC61000-4-2

The higher C_S value and lower R_S value in the IEC61000-4-2 model are more stringent than the Human Body Model. The larger storage capacitor injects a higher voltage to the test point when SW2 is switched on. The lower current limiting resistor increases the current charge onto the test point.

EIA STANDARDS

The Electronic Industry Association (EIA) developed several standards of data transmission which are revised and updated in order to meet the requirements of the industry. In data processing, there are two basic means of communicating between systems and components. The RS--232 standard was first introduced in 1962 and, since that time, has become an industry standard. The RS-232 is a relatively slow data exchange protocol, with a maximum baud rate of only 20kbps, which can be transmitted over a maximum copper wire cable length of 50 feet. The SP211EH/213EH series of data communications interface products have been designed to meet both the EIA protocol standards, and the needs of the industry.

DEVICE PIN TESTED	HUMAN BODY MODEL	IEC16000-4-2		
		Air Discharge	Direct Contact	Level
Driver Outputs	±15kV	±15kV	±8kV	4
Receiver Inputs	±15kV	±15kV	±8kV	4

Table 3. Transceiver ESD Tolerance Levels

TYPICAL APPLICATION CIRCUITS...SP211EH/213EH

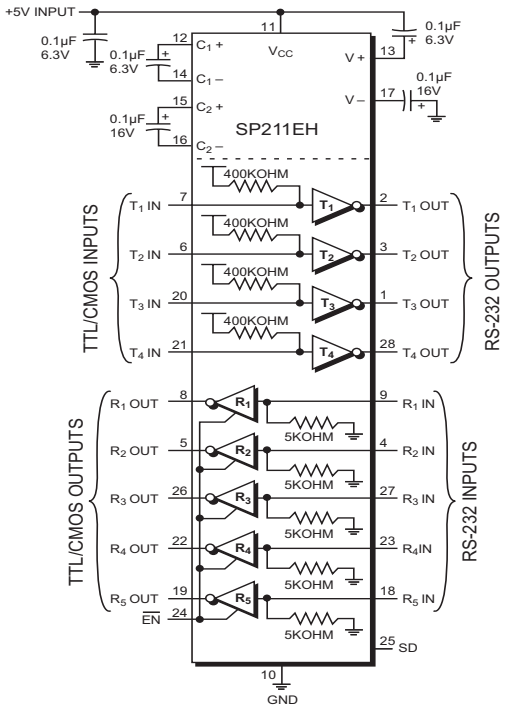

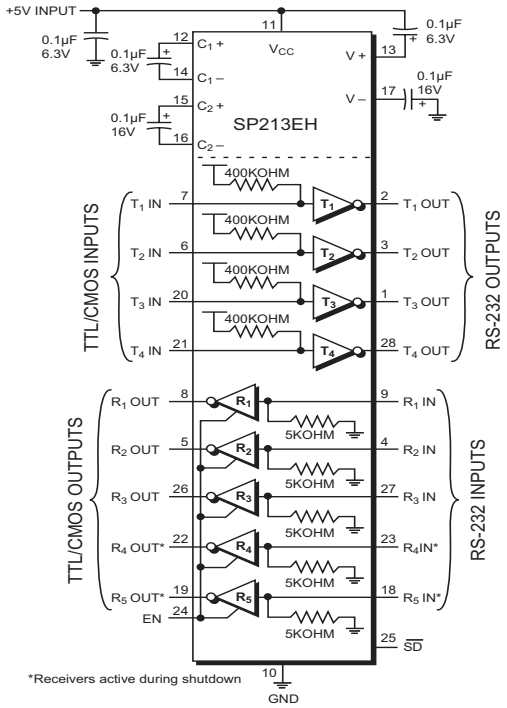

REVISION HISTORY			
REV.	DISCRIPTION	DATE	APP'D
A	DRAWING ORIGINATION	04/24/06	JL
B	CHANGE DRAWING LOGO AND COMPANY NAME	11/28/07	JL

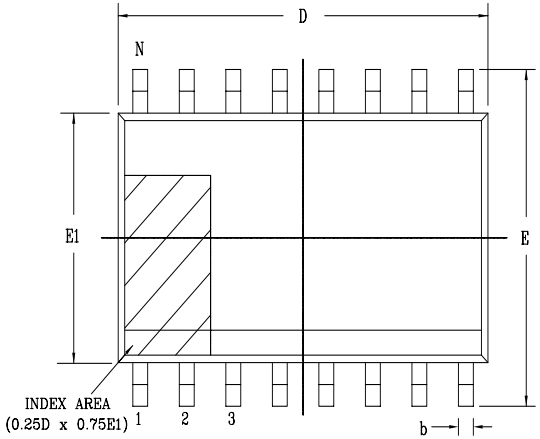

Top View

28 Pin SOICW JEDEC MS-013 Variation AE						
SYMBOLS	DIMENSIONS IN MM (Control Unit)			DIMENSIONS IN INCH (Reference Unit)		
	MIN	NOM	MAX	MIN	NOM	MAX
A	2.35	—	2.65	0.093	—	0.104
A1	0.10	—	0.30	0.004	—	0.012
A2	2.05	—	2.55	0.081	—	0.100
b	0.31	—	0.51	0.012	—	0.020
c	0.20	—	0.33	0.008	—	0.013
E	10.30 BSC			0.406 BSC		
E1	7.50 BSC			0.295 BSC		
e	1.27 BSC			0.050 BSC		
h	0.25	—	0.75	0.010	—	0.030
L	0.40	—	1.27	0.016	—	0.050
L1	1.40 REF			0.055 REF		
L2	0.25 BSC			0.010 BSC		
R	0.07	—	—	0.003	—	—
R1	0.07	—	—	0.003	—	—
θ	0°	—	8°	0°	—	8°
θ1	5°	—	15°	5°	—	15°
θ2	0°	—	—	0°	—	—
D	17.90 BSC			0.705 BSC		
N	28			28		

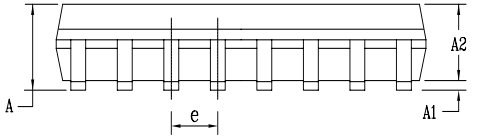

Side View

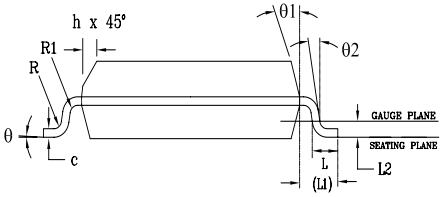

Front View

EXAR Powering Connectivity		EXAR CORPORATION	
		28 PIN SOICW PACKAGE OUTLINE	
Packaging Approval:		Drawing No: 28-PIN SOICW	
By: JL	Date: 11/28/07	Revision: B	Sheet: 1 OF 1

REVISION HISTORY			
REV.	DISCRIPTION	DATE	APP'D
A	DRAWING ORIGINATION	04/24/06	JL
B	CHANGE DRAWING LOGO AND COMPANY NAME	11/28/07	JL

Top View

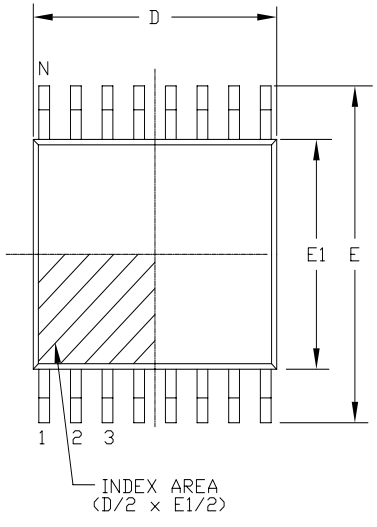

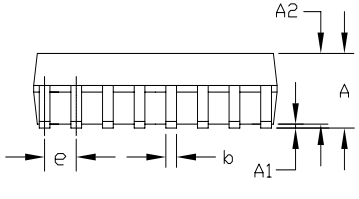

Side View

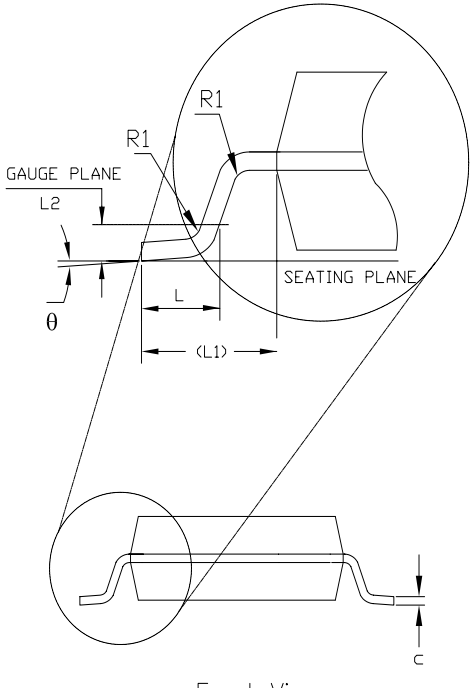

Front View

28 Pin SSOP JEDEC MO-150 Variation AH						
SYMBOLS	DIMENSIONS IN MM (Control Unit)			DIMENSIONS IN INCH (Reference Unit)		
	MIN	NOM	MAX	MIN	NOM	MAX
A	—	—	2.00	—	—	0.079
A1	0.05	—	—	0.002	—	—
A2	1.65	1.75	1.85	0.065	0.069	0.073
b	0.22	—	0.38	0.009	—	0.015
c	0.09	—	0.25	0.004	—	0.010
E	7.40	7.80	8.20	0.291	0.307	0.323
E1	5.00	5.30	5.60	0.197	0.209	0.220
e	0.65 BSC			0.026 BSC		
L	0.55	0.75	0.95	0.022	0.030	0.037
L1	1.25 REF			0.049 REF		
L2	0.25 BSC			0.010 BSC		
R1	0.09	—	—	0.004	—	—
θ	0°	4°	8°	0°	4°	8°
D	9.90	10.20	10.50	0.390	0.402	0.413
N	28			28		

EXAR Powering Connectivity	EXAR CORPORATION		
	28 PIN SSOP PACKAGE OUTLINE		
Packaging Approval:	Drawing No: 28-PIN SSOP		
By: JL Date: 11/28/07	Revision: B	Sheet: 1 OF 1	

ORDERING INFORMATION

RS232 Transceivers with Low–Power Shutdown and Tri–state Enable:

Model	Drivers	Receivers	Temperature Range	Package Type
SP211EHCA-L	4	5	0°C to +70°C	28–pin SSOP
SP211EHCA-L/TR	4	5	0°C to +70°C	28–pin SSOP
SP211EHCT-L	4	5	0°C to +70°C	28–pin SOIC
SP211EHCT-L/TR	4	5	0°C to +70°C	28–pin SOIC
SP211EHEA-L	4	5	–40°C to +85°C	28–pin SSOP
SP211EHEA-L/TR	4	5	–40°C to +85°C	28–pin SSOP
SP211EHET-L	4	5	–40°C to +85°C	28–pin SOIC
SP211EHET-L/TR	4	5	–40°C to +85°C	28–pin SOIC

RS232 Transceivers with Low–Power Shutdown, Tri–state Enable, and Wake–Up Function:

Model	Drivers	Receivers	Temperature Range	Package Type
SP213EHCA-L	4	5, with 2 active in Shutdown	0°C to +70°C	28–pin SSOP
SP213EHCA-L/TR	4	5, with 2 active in Shutdown	0°C to +70°C	28–pin SSOP
SP213EHEA-L	4	5, with 2 active in Shutdown	–40°C to +85°C	28–pin SSOP
SP213EHEA-L/TR	4	5, with 2 active in Shutdown	–40°C to +85°C	28–pin SSOP

DATE	REVISION	DESCRIPTION
08	--	Legacy Sipex Datasheet
10/28/10	1.0.0	Convert to Exar format, update ordering information and change rev to 1.0.0
June 2011	1.0.1	All options of SP208EH are discontinued per PDN 110510-01

Notice

EXAR Corporation reserves the right to make changes to any products contained in this publication in order to improve design, performance or reliability. EXAR Corporation assumes no representation that the circuits are free of patent infringement. Charts and schedules contained herein are only for illustration purposes and may vary depending upon a user's specific application. While the information in this publication has been carefully checked;
No responsibility, however, is assumed for inaccuracies.

EXAR Corporation does not recommend the use of any of its products in life support applications where the failure or malfunction of the product can reasonably be expected to cause failure of the life support system or to significantly affect its safety or effectiveness. Products are not authorized for use in such applications unless EXAR Corporation receives, in writing, assurances to its satisfaction that: (a) the risk of injury or damage has been minimized ; (b) the user assumes all such risks; (c) potential liability of EXAR Corporation is adequately protected under the circumstances.

Copyright 2011 EXAR Corporation

Datasheet June 2011

For technical support please email Exar's Serial Technical Support group at: serialtechsupport@exar.com

Reproduction, in part or whole, without the prior written consent of EXAR Corporation is prohibited.