THIS DRAWING IS UNPUBLISHED. RELEASED FOR PUBLICATION -,- .
© COPYRIGHT - BY TYCO ELECTRONICS CORPORATION. ALL INTERNATIONAL RIGHTS RESERVED.

LOC	DIST
G	14

REVISIONS

P	LTR	DESCRIPTION	DATE	DWN	APVD
	B1	REDRAWN PER ECR 09-006116	17MAR09	JR	TM

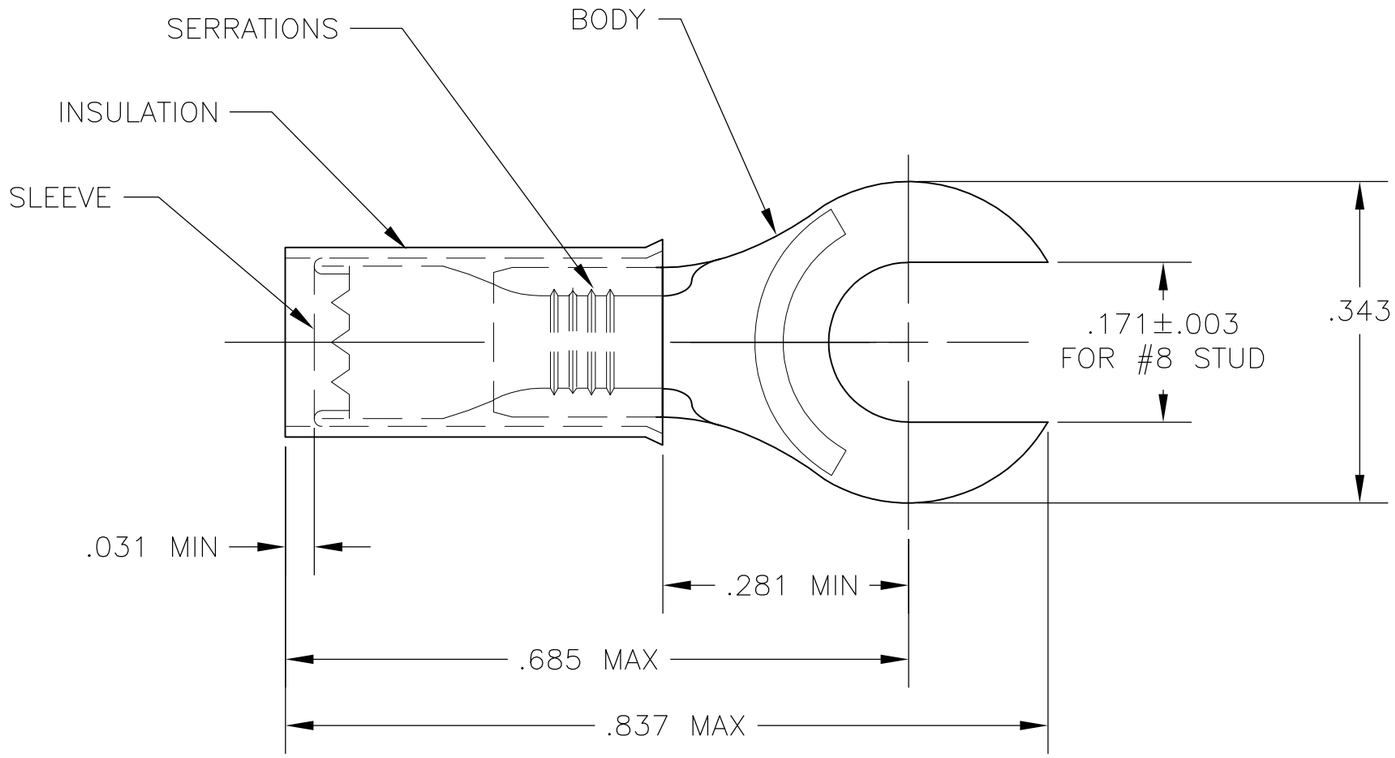

1 FOR .115 TO .170 WIRE INSULATION DIA.

2 MATERIAL TONGUE THK IS .031±.002

DESCRIPTION	MATERIAL	PART NO
WIRE TERMINAL	INSULATION: NYLON, COLOR BLUE BODY & SLEEVE: COPPER PER ASTM B152 TIN PLATE PER ASTM B545	35440

THIS DRAWING IS A CONTROLLED DOCUMENT.

DIMENSIONS: INCHES

TOLERANCES UNLESS OTHERWISE SPECIFIED:

0 PLC	± –
1 PLC	± –
2 PLC	± –
3 PLC	± .008
4 PLC	± –
ANGLES	± 5°

MATERIAL: SEE TABLE

FINISH: SEE TABLE

DWN jr ruth 17MAR09
CHK TOM MICHIELUTTI 17MAR09
APVD TOM MICHIELUTTI 17MAR09
PRODUCT SPEC —
APPLICATION SPEC —
WEIGHT —

Tyco Electronics
Tyco Electronics Corporation
Harrisburg, PA 17105-3608

NAME
TERMINAL, PIDG
RING TONGUE, WIRE SIZE 16-14 AWG
—

SIZE	CAGE CODE	DRAWING NO	RESTRICTED TO
A3	00779	C-35440	—

CUSTOMER DRAWING

SCALE	SHEET	REV
8:1	1 OF 1	B1