19164

MATERIAL NUMBER	ENGINEERING NUMBER	STUD SIZE	"S" REF	"W" MAX	"L" MAX
191640840	SD-810	#10	.214 / 5.44	.460/11.68	1.90 / 48.3
191640884	SD-814	1/4	.278 / 7.06	.460/11.68	1.90 / 48.3
191640842	SD-8516	5/16	.340 / 8.63	.460/11.68	1.90 / 48.3
191640843	SD-838	3/8	.400 / 10.16	.616/15.65	2.03 / 51.6
191641007	SD-812-XWP-PL	1/2	.520 / 13.21	.786/19.96	2.03 / 51.6

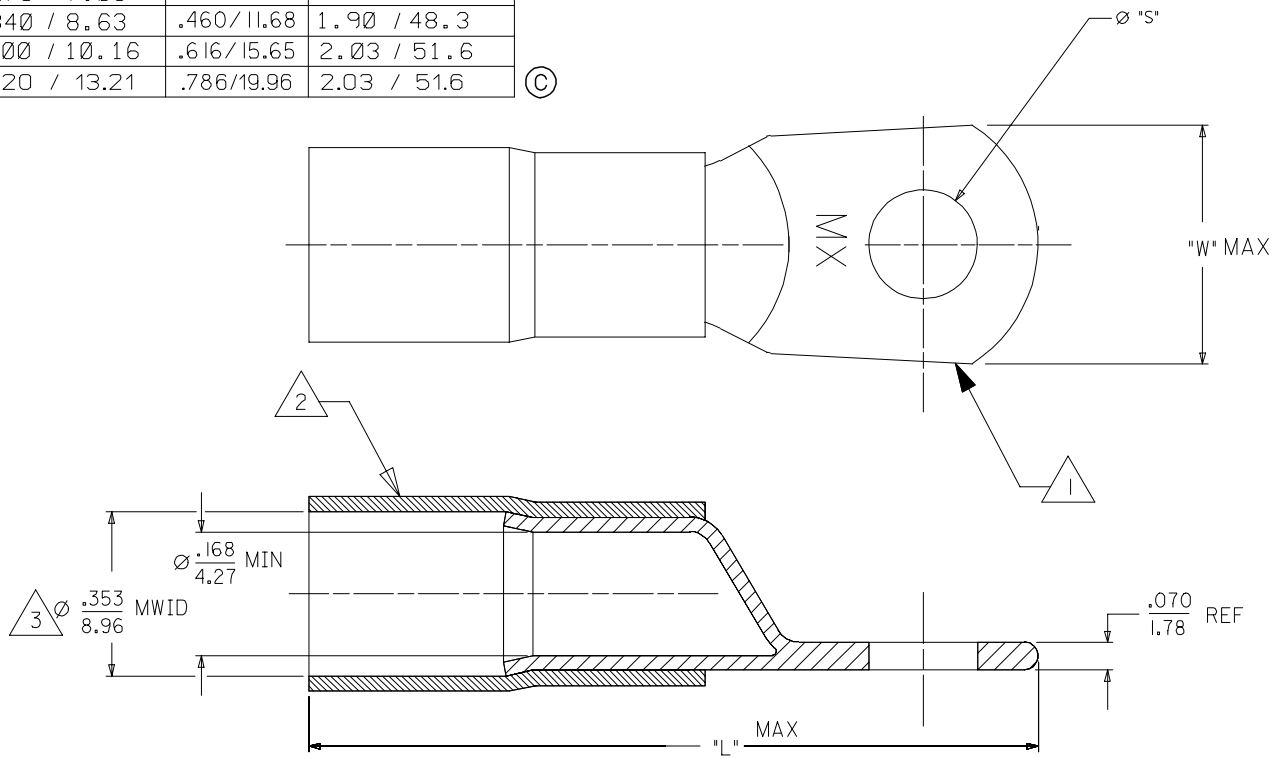

NOTES:

1. MATERIAL: TERMINAL: COPPER. PLATING: TIN
2. INSULATION: HEAT SHRINKABLE TUBING W/HOT MELT ASHESIVE INNER LINER. COLOR: RED
3. MWID = MAXIMUM WIRE INSULATION DIAMETER.
4. ASSEMBLY IS ROHS COMPLIANT.

SALES DRAWING

ADDED MATL NO. & ROHS
EC NO: ETC2007-0427 2007/05/18
DRWN: EHILE 2007/05/21
CH'KD: JMACNEIL 2007/05/22
APPR: JMACNEIL
DESCRIPTION
REV

QUALITY SYMBOLS
▼=0
▽=0

GENERAL TOLERANCES (UNLESS SPECIFIED)

	mm	INCH
4 PLACES	± ---	± ---
3 PLACES	± ---	± ---
2 PLACES	± ---	± ---
1 PLACE	± ---	± ---
ANGULAR ±---°		

DRAFT WHERE APPLICABLE MUST REMAIN WITHIN DIMENSIONS

DIMENSION STYLE: IN/MM

DRAWN BY	BRE	DATE 04/02/11
CHECKED BY	HEB	DATE 04/02/11
APPROVED BY	RWD	DATE 04/02/11

MATERIAL NO.: SEE CHART

SCALE: ---
DESIGN UNITS: INCH
THIRD ANGLE PROJECTION

TITLE: RING TONGUE TERMINAL PERMA-SEAL 8 AWG NIAC

molex MOLEX INCORPORATED

DOCUMENT NO.: SD-19164-066
SHEET NO.: 1 OF 1

SIZE: B

THIS DRAWING CONTAINS INFORMATION THAT IS PROPRIETARY TO MOLEX INCORPORATED AND SHOULD NOT BE USED WITHOUT WRITTEN PERMISSION

tb_frame_B_P_ME_T
Rev. D 2004/04/02

Mouser Electronics

Authorized Distributor

Click to View Pricing, Inventory, Delivery & Lifecycle Information:

Molex:
19164-0842