Connecting cables M12 to M12, LED A-coded male, straight - female, angled

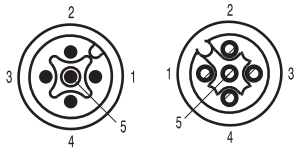

Male Female

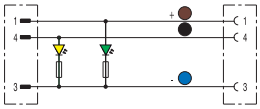

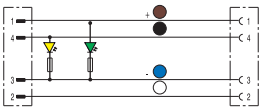

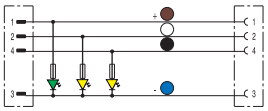

Ordering data

Male, straight - Female, angled		2 LEDs 3-pole		2 LEDs 4-pole		3 LEDs 4-pole	
Type		Type	Order No.	Type	Order No.	Type	Order No.
PVC	1.5 m	SAIL-M12GM12W-3L1.5V	**1925410150**	SAIL-M12GM12W-4-2L1.5V	**1925420150**	SAIL-M12GM12W-4-3L1.5V	**1963930150**
PUR	1.5 m	SAIL-M12GM12W-3L1.5U	**9457790150**	SAIL-M12GM12W-4-2L1.5U	**1906410150**	SAIL-M12GM12W-4-3L1.5U	**1963910150**
PUR halogen-free	1.5 m	SAIL-M12GM12W-3L1.5Q	**1926600150**	SAIL-M12GM12W-4-2L1.5Q	**1926610150**	SAIL-M12GM12W-4-3L1.5Q	**1232810150**
PUR halogen-free yellow	1.5 m					SAIL-M12GM12W-4-3LW1.5QGE	**1093060150**
Resistant to welding beads	1.5 m	SAIL-M12GM12W-3L1.5T	**1004320150**	SAIL-M12GM12W-4-2L1.5T	**1004310150**	SAIL-M12GM12W-4-3LW1.5T	**1020930150**
Note		Other versions on request		Other versions on request		Other versions on request	

Standard cable lengths

All cables listed under the ordering data have a length of 1.5 metres. The last four ordering digits must be changed when ordering other standard cable lengths.	1.5 m	xxxxxx0150
	3.0 m	xxxxxx0300
	5.0 m	xxxxxx0500
	10.0 m	xxxxxx1000

Technical data

Rated current	4 A
Protection class	IP 67
Core cross-section	0.34 mm²
Contact surface	gold-plated
Temperature range of housing	-25…+85 °C
Rated voltage (acc. to VDE standard 0110 ISO group C)	250 V (3- and 4-pole) / 125 V (5-pole)

Chapter W includes additional technical specifications for the cable
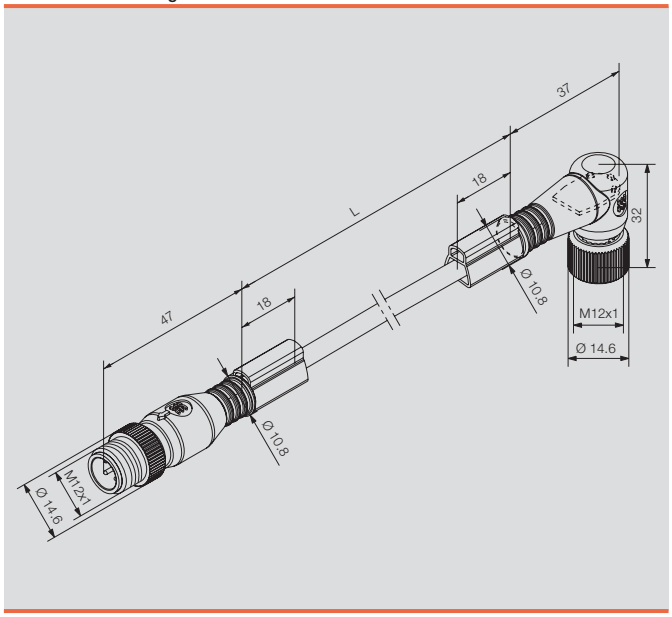
Dimensioned drawing