THIS DRAWING IS UNPUBLISHED. RELEASED FOR PUBLICATION – ,N/A .
© COPYRIGHT N/A By – ALL RIGHTS RESERVED.

LOC	DIST
—	—

REVISIONS

P	LTR	DESCRIPTION	DATE	DWN	APVD
	T	REV PER ECO-15-016251	13NOV15	KG	CD

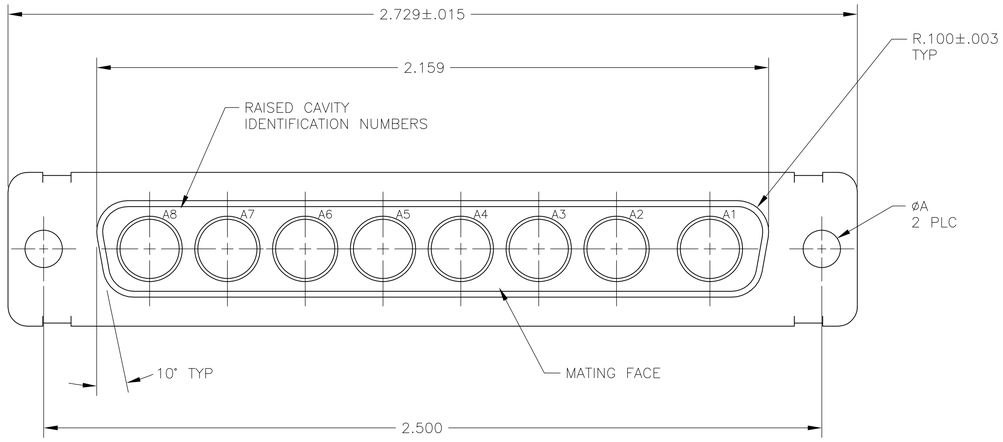

1. THIS CONNECTOR ACCEPTS (8) POWER 8, OR COAX SOCKET CONTACTS IN POSITIONS A1 THRU A8, PURCHASED SEPARATELY.

△2 STEEL PER ASTM-A-109.

△3 BRASS PER MIL-C-50 AND ASTM-B-36 UNS NO. C26000.

△4 FINISH: CADMIUM PLATED PER QQ-P-416.

△5 GOLD PLATED PER ASTM-B-488 TYPE 3, CODE C, CLASS 1.25 OVER COPPER PER MIL-C-14550, CLASS IV.

△6 FINISH: TIN PER ASTM-B-545 .000400 MIN THK OVER COPPER PER AMS2418 .000050 MIN THK.

△7 FINISH: ZINC PLATED PER ASTM-B-633 .000200-.000400 THK WITH SUPPLEMENTARY CHROMATE (Cr3+).

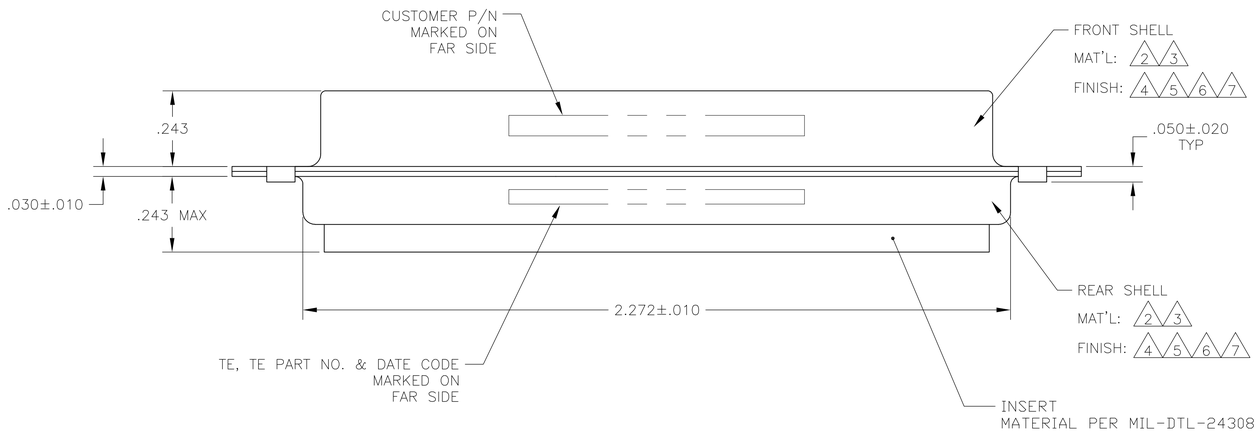

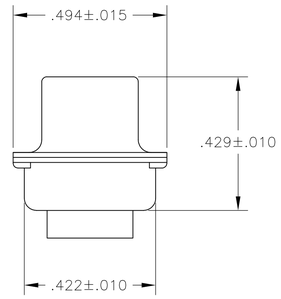

PRELIMINARY– NOT RELEASED FOR PRODUCTION

REMARKS	øA	CUSTOMER PART NO.	PART NO.
△2 △6	.120	–	5-445730-5
△2 △7	.120	–	5-445730-1
△2 △4	.120	13508255	445730-8
△3 △5	.120	ST81D284-002	445730-7
△3 △5	.120	B010942-0042	445730-6
△2 △6	.120	–	445730-5
△3 △5	.154	311P405-15S-B-15	445730-4
△3 △5	.120	311P405-15S-B-12	445730-3
△2 △4	.120	2037AS246-01,00779,3003	445730-2
△2 △4	.120	–	445730-1

THIS DRAWING IS A CONTROLLED DOCUMENT.

DIMENSIONS: INCHES

TOLERANCES UNLESS OTHERWISE SPECIFIED:
0 PLC ± –
1 PLC ± –
2 PLC ± –
3 PLC ± .005
4 PLC ± –
ANGLES ± 0°30'

MATERIAL –
FINISH –

DWN T. SHUEY 29-NOV-88
CHK A.EMADI 01-DEC-88
APVD A.EMADI 01-DEC-88
PRODUCT SPEC —
APPLICATION SPEC —
WEIGHT —

TE Connectivity

NAME
RECEPTACLE ASSEMBLY
AMPLIMITE 8C8
SIZE 4, SERIES 109, COAX

SIZE	CAGE CODE	DRAWING NO	RESTRICTED TO
A1	00779	C-445730	—

CUSTOMER DRAWING | SCALE 4:1 | SHEET 1 OF 1 | REV T

4805 (3/11)