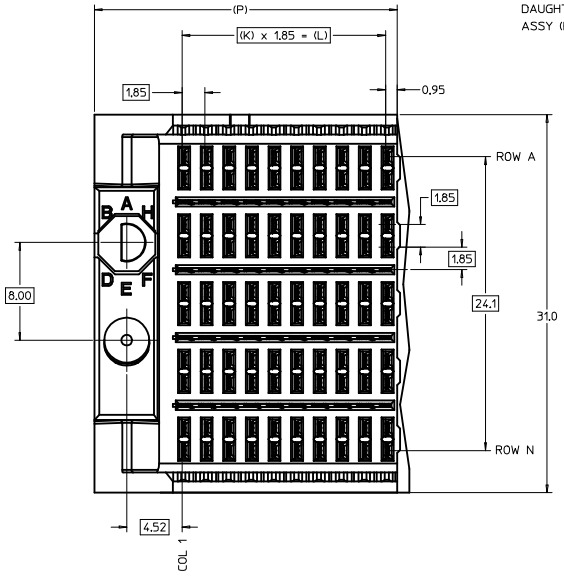

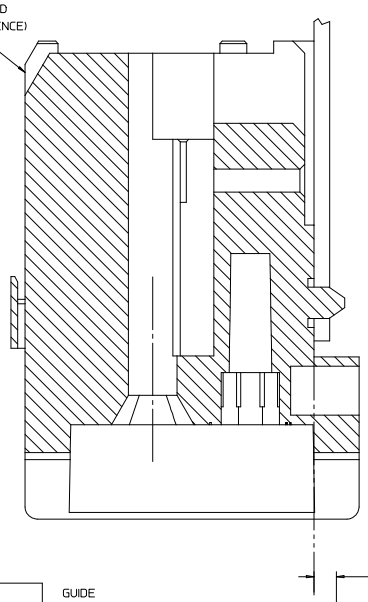

NOTES:
1. MATERIAL: HOUSING - LIQUID CRYSTAL POLYMER (LCP) GLASS-FILLED. UL 94V-0. COLOR - GRAY. SIGNAL CONTACT AND GROUND BLADE - HIGH PERFORMANCE COPPER ALLOY.
2. FINISHES: SELECTIVE GOLD (Au) ON CONTACT AREA. SELECTIVE MATTE TIN (Sn) ON PCB TAILS. NICKEL (Ni) OVERALL.
3. THIS PART CONFORMS TO MOLEX PRODUCT SPECIFICATION PS-75221-999.
4. FOR MIXED CONTACT MATING LENGTHS CONSULT MOLEX FOR AVAILABILITY. CONTACT PAIRS MUST BE THE SAME LENGTH.
5. FOR SPECIFIC PART NUMBER AND MATING INFORMATION PLEASE REFER TO CHART.
6. PACKAGE PER PK-70873-565.
7. MARK PART NUMBER AND DATE CODE APPROXIMATELY WHERE SHOWN.
8. OPTIONAL HOLE LOCATION FOR GROUNDED GUIDE PIN OR ADDITIONAL GUIDE PIN SUPPORT. FOR GROUNDED GUIDE PIN, HOLE TO BE PLATED. DRILL SIZE Ø2.58. PAD SIZE Ø5.50
9. THESE PARTS CONFORM TO MOLEX COSMETIC SPECIFICATION PS-45499-002 CLASS B.
10. MAPS (MOLEX ADVANCED PLATING SYSTEM).

MODULE ORIENTATION
2= LEFT

COLUMN
1 = 10 COL
2 = 25 COL

75237-2***

KEYING ORIENTATION (SEE TABLE)

ROWS AG & NG RECOMMENDED FOR ALL APPLICATIONS. THESE ROWS SHOULD BE CONNECTED TO GROUND

PIN LENGTH DIM "M"	GOLD (Au) THICKNESS micrometers
0=3.55 mm	0.25 (MAPS)
1=4.55 mm	
2=5.55 mm	
3=3.55 mm	0.76
4=4.55 mm	
5=5.55 mm	
7=3.55 mm	1.27
8=4.55 mm	
9=5.55 mm	

PART NUMBER TABLE				
ASSY PART NO.	K	L	P	TOTAL NO. OF DIFFERENTIAL PAIRS
75237-210*	9	16.65	24.78	50
75237-220*	24	44.40	52.53	125

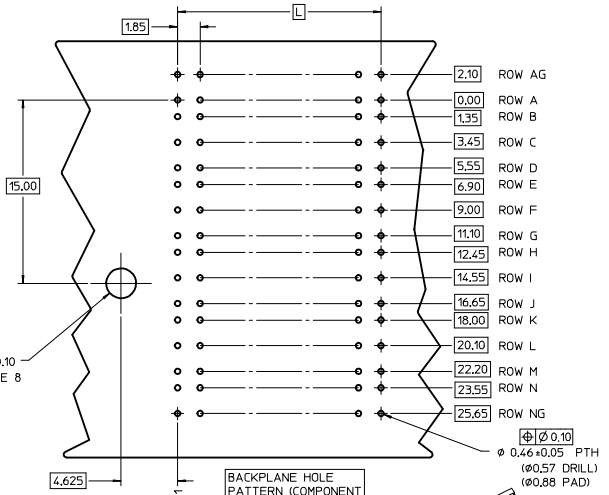

BACKPLANE HOLE PATTERN (COMPONENT SIDE) 10 POS. SHOWN

THE PRIMARY CARTON WITH A LABEL STATING "ELV AND RoHS COMPLAINT" IS LEAD FREE. CARTONS WITHOUT THIS LABEL MAY CONTAIN LEAD.

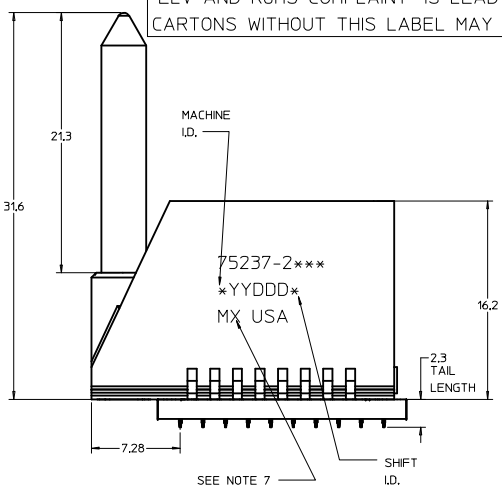

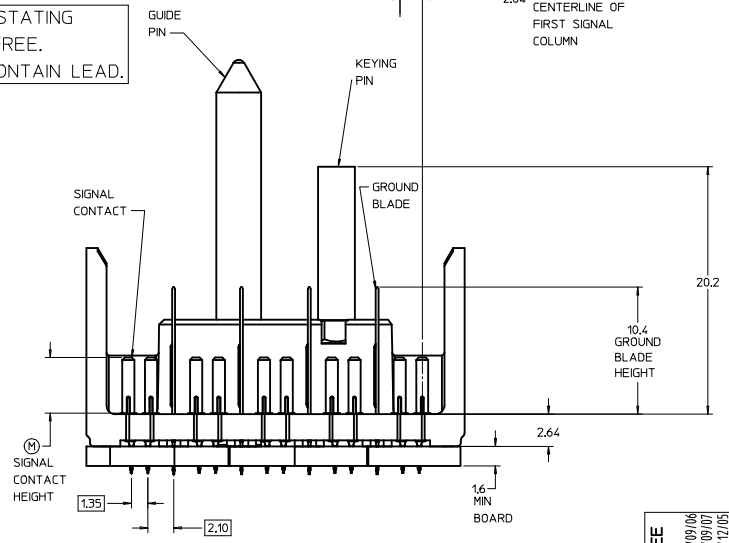

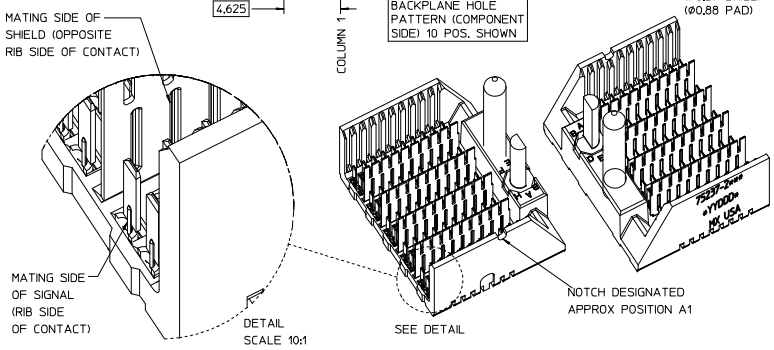

P/N 75237-( )	-**0*	-**1*	-**2*	-**3*	-**4*	-**5*	-**6*	-**7*	-**8*
KEYING PIN ORIENTATION	0	A	B	C	D	E	F	G	H

LEAD-FREE PLATING

REV	DESCRIPTION
C	REV TO LEAD-FREE EC NO: UCP2013-0690 DRWN:GES 2012/09/06 CHK:DMWOLFE 2012/09/07 APPR:SMILLER 2012/12/05

QUALITY SYMBOLS: =0

GENERAL TOLERANCES (UNLESS SPECIFIED)

	mm	INCH
4 PLACES	± ---	± ---
3 PLACES	± ---	± ---
2 PLACES	± 0.25	± ---
1 PLACE	± 0.38	± ---
0 PLACE	±	±
ANGULAR	±1/2°	

DRAFT WHERE APPLICABLE MUST REMAIN WITHIN DIMENSIONS

DIMENSION STYLE: MM ONLY
SCALE: 5:1
DESIGN UNITS: METRIC
THIRD ANGLE PROJECTION

		DATE
DRAWN BY	NMARTIN	2004/03/11
CHECKED BY	SREED	2004/03/11
APPROVED BY	CBIXLER	2004/03/11

TITLE: GBX 5-PAIR LF LEFT END BACKPLANE SALES ASSEMBLY

molex

MATERIAL NO.: SEE CHART
DOCUMENT NO.: SD-75237-210
SHEET NO.: 1 OF 1
SIZE: D

THIS DRAWING CONTAINS INFORMATION THAT IS PROPRIETARY TO MOLEX INCORPORATED AND SHOULD NOT BE USED WITHOUT WRITTEN PERMISSION