THIS DRAWING IS UNPUBLISHED. RELEASED FOR PUBLICATION -,- .
© COPYRIGHT - By - ALL RIGHTS RESERVED.

LOC	DIST
G	14

REVISIONS

P	LTR	DESCRIPTION	DATE	DWN	APVD
	AA	REVISED PER ECO-14-015277	13FEB2015	NK	DR

AMP WIRE RANGE	E13288 Listed	LR7189 Certified
22-16 AWG SOLID OR STRANDED	22-16 AWG SOLID OR STRANDED	22-16 AWG SOLID OR STRANDED

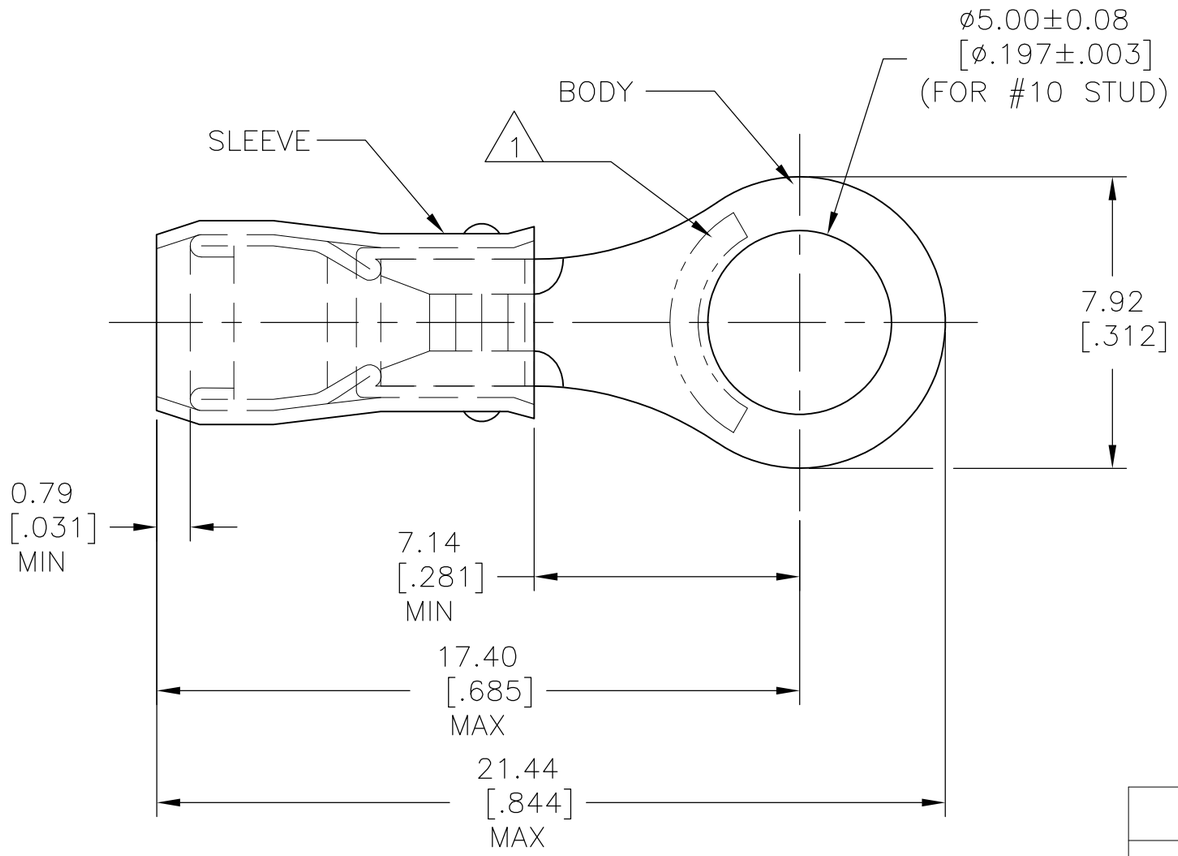

1 STAMP AMP 22-18* APPROX AS SHOWN 22-16 TERMINALS ARE STAMPED 22-18 IN ACCORDANCE WITH MILITARY SPEC MIL-T-7928 COMMERCIAL WIRE RANGE IS 22-16.

2 WIRE INSULATION DIA: 2.03-3.18[.080-.125].

3 TONGUE MATERIAL THK: 0.79±0.05[.031±.002].

MILITARY P/N AND CLASS	QUANTITY	PACKAGE TYPE	PART NO
-	100	LOOSE PIECE, BOX	6-36153-1
MS25036-103 CLASS 2	5000	ON TAPE, REEL	2-36153-2
MS25036-103 CLASS 1 & 2	1000	LOOSE PIECE	36153

AMP INCORPORATED
CUSTOMER SERVICE SYSTEMS

FOR ADDITIONAL PRODUCT INFORMATION OR COPIES OF DRAWINGS AND TECHNICAL DOCUMENTS	PRODUCT INFORMATION CENTER 1-800-522-6752
FOR APPLICATION TOOLING INFORMATION	TOOLING ASSISTANCE CENTER 1-800-722-1111
FOR ORDER ENTRY	1-800-526-5142

MAX RECOMMENDED OPERATING TEMPERATURE: 105°C MAX

VOLTAGE RATING: 300 V MAX

CIRCULAR MIL AREA: 0.26-1.65mm² [509-3,260] CIR MILS SOLID OR STRANDED

THIS DRAWING IS A CONTROLLED DOCUMENT FOR AMP INCORPORATED. IT IS SUBJECT TO CHANGE AND THE CONTROLLING ENGINEERING ORGANIZATION SHOULD BE CONTACTED FOR THE LATEST REVISION.

THIS DRAWING IS A CONTROLLED DOCUMENT.

DIMENSIONS: mm [INCHES]

TOLERANCES UNLESS OTHERWISE SPECIFIED:

0 PLC	± -
1 PLC	± -
2 PLC	± 0.20[.008]
3 PLC	± -
4 PLC	± -
ANGLES	± -

MATERIAL: COPPER PER ASTM B-152 SLEEVE, RED NYLON

FINISH: TIN PLATE PER ASTM B545

DWN	DK SCHRUM	9/8/93
CHK	RE HERSEY	9/8/93
APVD	ML ELLIS	9/8/93
PRODUCT SPEC	UL 486A	
APPLICATION SPEC	NOT AVAILABLE	
WEIGHT	-	

TE Connectivity

NAME: TERMINAL, RING TONGUE, PIDG™ WIRE SIZE, 22-16 AWG

SIZE	CAGE CODE	DRAWING NO	RESTRICTED TO
A3	00779	C-36153	-

CUSTOMER DRAWING

SCALE	SHEET	REV
NTS	1 OF 2	AA

THIS DRAWING IS UNPUBLISHED. RELEASED FOR PUBLICATION – ,– .
© COPYRIGHT – By – ALL RIGHTS RESERVED.

LOC	DIST
G	14

REVISIONS

P	LTR	DESCRIPTION	DATE	DWN	APVD
	–	SEE SHEET 1	–	–	–

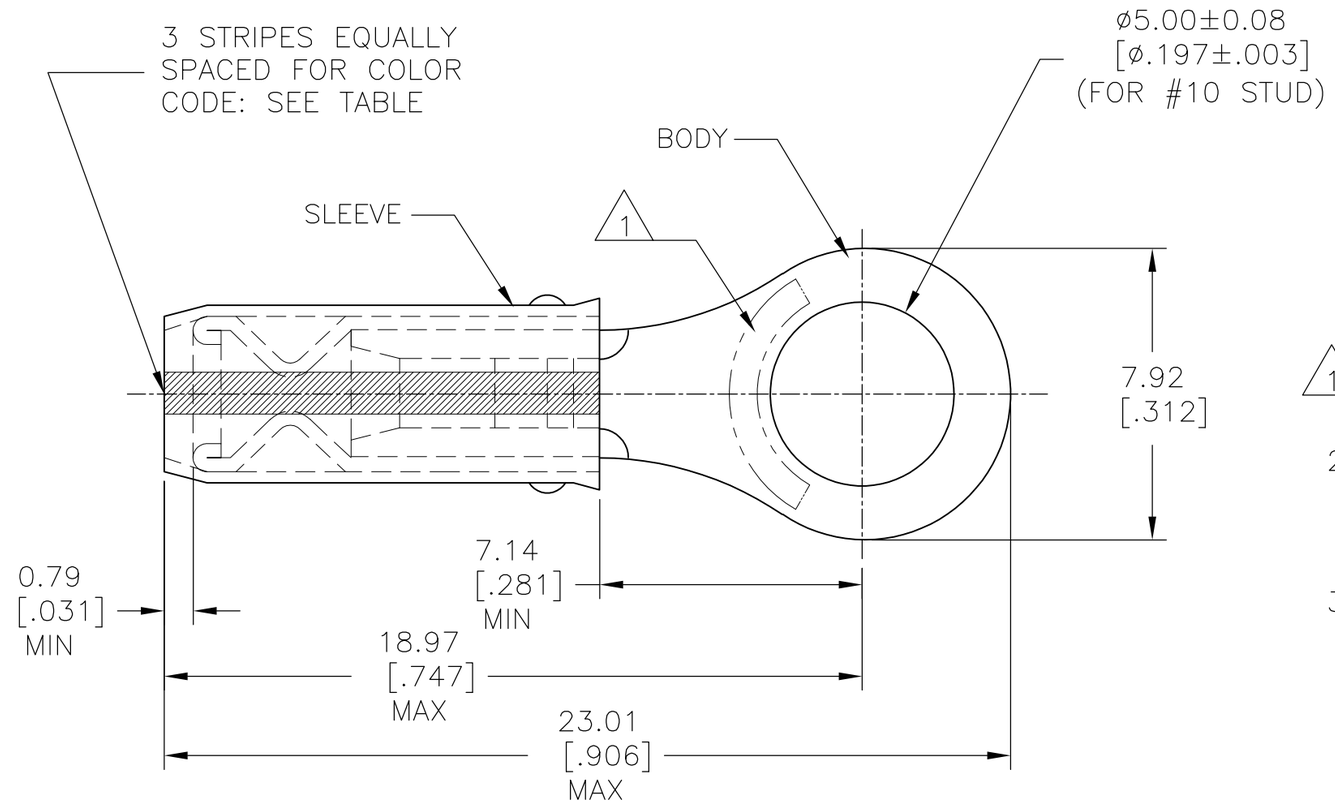

AMP
WIRE RANGE

SEE TABLE
STRANDED

1 STAMP AMP [ ] APPROX AS SHOWN SEE TABLE BELOW.

2 WIRE INSULATION DIA: 0.97–2.79[.038–.110] FOR 22 AWG.
1.17–2.79[.046–.110] FOR 20 AWG.
1.42–2.79[.056–.110] FOR 18 AWG.

3 TONGUE MATERIAL THK: 0.79±0.05[.031±.002].

MILITARY P/N AND CLASS	STRIPE COLOR	1 STAMPING	WIRE SIZE	QUANTITY	PACKAGE TYPE	PART NO
–	WHITE	18*	18	100	LOOSE PIECE, BOX	9–36153–1
–	RED	20*	20	100	LOOSE PIECE, BOX	8–36153–1
–	GREEN	22*	22	100	LOOSE PIECE, BOX	7–36153–1
MS7928/1–33 CLASS 2	WHITE	18*	18	5000	ON TAPE, REEL	2–36153–9
M7928/1–24 CLASS 2	RED	20*	20	5000	ON TAPE, REEL	2–36153–8
M7928/1–15 CLASS 2	GREEN	22*	22	5000	ON TAPE, REEL	2–36153–6
MS7928/1–33 CLASS 1 & 2	WHITE	18*	18	1000	LOOSE PIECE	2–36153–5
M7928/1–24 CLASS 1 & 2	RED	20*	20	1000	LOOSE PIECE	2–36153–4
M7928/1–15 CLASS 1 & 2	GREEN	22*	22	1000	LOOSE PIECE	2–36153–3

AMP INCORPORATED
CUSTOMER SERVICE SYSTEMS

FOR ADDITIONAL PRODUCT INFORMATION OR COPIES OF DRAWINGS AND TECHNICAL DOCUMENTS	PRODUCT INFORMATION CENTER 1–800–522–6752
FOR APPLICATION	TOOLING ASSISTANCE CENTER
TOOLING INFORMATION	1–800–722–1111
FOR ORDER ENTRY	1–800–526–5142

MAX RECOMMENDED OPERATING TEMPERATURE: 105°C MAX

VOLTAGE RATING: 300 V MAX

WIRE RANGE:	CIRC MIL AREA:
22	0.38mm² [754]
20	0.60mm² [1,186]
18	0.96mm² [1,900]

STRANDED

THIS DRAWING IS A CONTROLLED DOCUMENT FOR AMP INCORPORATED. IT IS SUBJECT TO CHANGE AND THE CONTROLLING ENGINEERING ORGANIZATION SHOULD BE CONTACTED FOR THE LATEST REVISION.

THIS DRAWING IS A CONTROLLED DOCUMENT.

DIMENSIONS: mm [INCHES]

TOLERANCES UNLESS OTHERWISE SPECIFIED:

0 PLC	± –
1 PLC	± –
2 PLC	± 0.20[.008]
3 PLC	± –
4 PLC	± –
ANGLES	± –

MATERIAL: COPPER PER ASTM B–152 SLEEVE, RED NYLON

FINISH: TIN PLATE PER ASTM B545

DWN	DK SCHRUM	9/8/93
CHK	RE HERSEY	9/8/93
APVD	ML ELLIS	9/8/93
PRODUCT SPEC	–	
APPLICATION SPEC	NOT AVAILABLE	
WEIGHT	–	

TE Connectivity

NAME: TERMINAL, RING TONGUE, I.R., PIDG™ WIRE SIZE, 22–16 AWG

SIZE	CAGE CODE	DRAWING NO	RESTRICTED TO
A3	00779	C–36153	–

CUSTOMER DRAWING

SCALE	SHEET	REV
NTS	2 OF 2	AA