Order-No.	Shell Size / for No. of Contacts	A ±0.3	B ±0.1	C ±0.3	D ±0.3	E ±0.3	øF1 min - max	øF2 max I	øF2 Rubber bushing	G ±0.3	H ±0.3	J ±0.3	K ±0.3	L ±0.3	M ±0.5	N ±0.3	Q	R ±0.3
FMK1G	1 / 9	14.9	25	31.6	39.5	15.2	3 - 9.5	6.5	FKT1-2	20.8	42	12.1	17	19.4	23.5	12	-	-
FMK2G	2 / 15	15.9	33.3	40	41	15.2	3 - 8.5	6.5	FKT1-2	23.3	43.5	12.1	25.8	27.9	19	16	84°	-
FMK3G	3 / 25	27.8	47	53.7	45	15.2	3 - 8.5	8	FKT1-2A	31.7	47.5	12.1	39	41.4	28	16	80°	12.9
FMK4G	4 / 37	44.3	63.5	70.2	48	18.2	3 - 12	9	FKT3-4	48.2	50.5	15.1	55.5	57.8	32.5	21	80°	16.1
FMK5G	5 / 50	41.9	61.1	67.8	48	18.2	3 - 12	9.7	FKT3-4A	45.8	50.5	15.1	53.1	55.5	32.5	21	80°	16.1

øF1 = Cable diameter without rubber bushing
øF2 = Cable diameter with rubber bushing

view of the hoods without lid

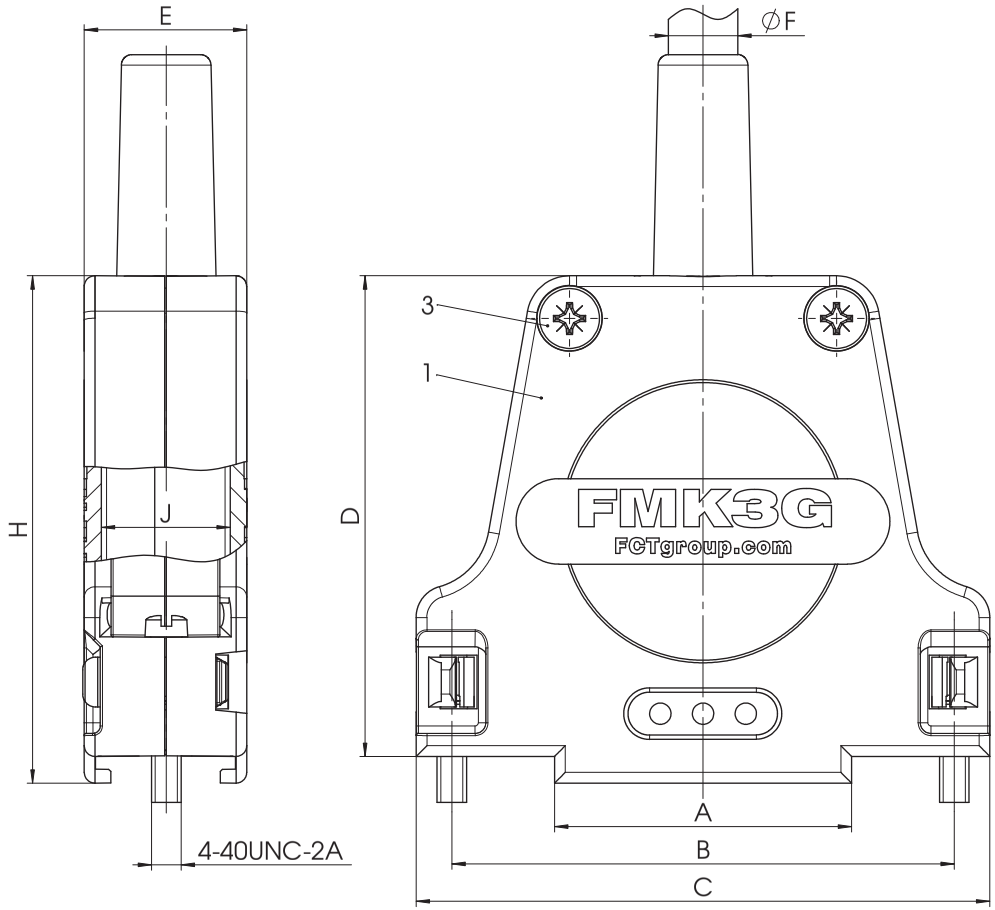

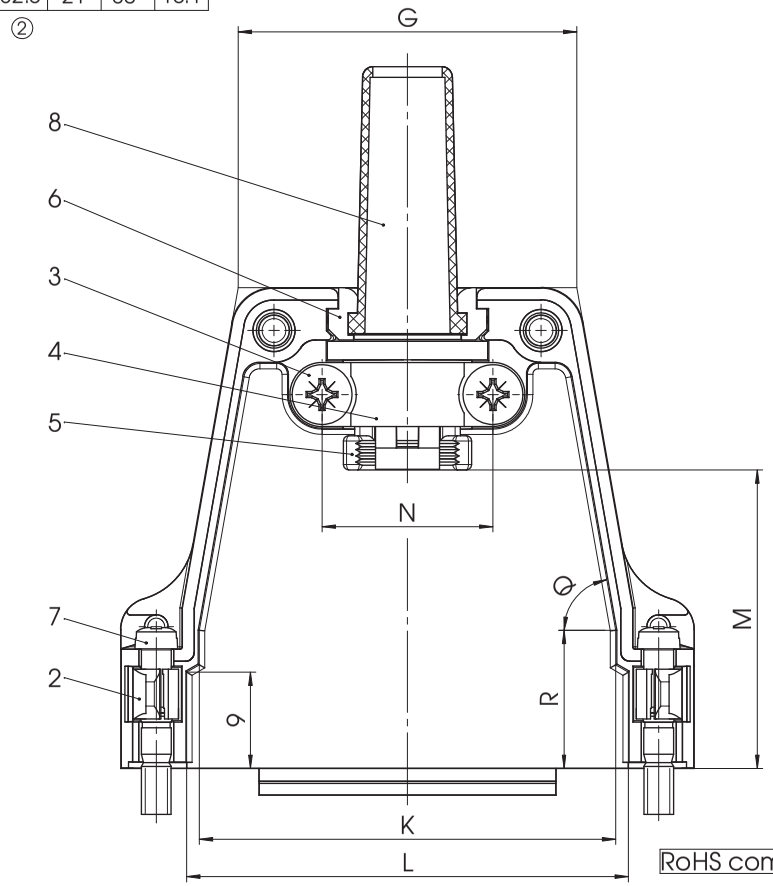

RoHS compliant

No.	St.	Part	Type Description/Material	Surface plating/Colour/Class
8	1	Rubber bushing	Elastomer	black
7	2	Locking screw	FVS1/5-K1163 4-40 / Steel	nickel plated
6	0/2	Cable reduction plate	Zinc die-cast	nickel plated over copper
5	1	Strain relief	Polyester	nickel plated over copper
4	1	Cable clamp	Steel	tin plated over nickel
3	4	Screw	Case hardened steel	zinc plated over copper
2	2	Catch spring	Polyester	black
1	1	Hood	FMK1-5G / Zinc die-cast	nickel plated over copper

① max. torque are 40 Ncm
Part-No. 8 not mounted
FMK1G without Part-No. 6

REV.	DATE	CH.-NO.
2	22-04-2008	22247
1	15-01-2008	22060

Measurement without tolerance acc. to ISO 2768-m
SCALE 2:1
NAME / DATE
DRAWN Anke.Meyer-Richter 15-01-2008
CHECKED BurkhardtMUC 23-04-2008
FCT group fctgroup.com
ORIGINAL: DIN A3-DRAWING AS A FILE
TITLE Metal hood
DWG.NO. FMK1-5G
REV. 2
REPLACEMENT FOR: FMK1-5G_SW
PAGES 1

COMMENT:
ALL RIGHTS ARE RESERVED BY US FOR THIS DRAWING, WITHOUT OUR PRIOR CONSENT,
IT MAY NEITHER BE DUBLICATED NOR MADE AVAILABLE TO A THIRD PARTY,
AND IT ALSO MAY NOT BE IMPROPERLY USED BY TE RECEIVER, OR A THIRD PARTY.