THIS DRAWING IS UNPUBLISHED. RELEASED FOR PUBLICATION -,- .
© COPYRIGHT - BY TYCO ELECTRONICS CORPORATION. ALL RIGHTS RESERVED.

LOC	DIST
G	14

REVISIONS

P	LTR	DESCRIPTION	DATE	DWN	APVD
	A1	REV PER ECR07-016469	18JUL07	JR	TM

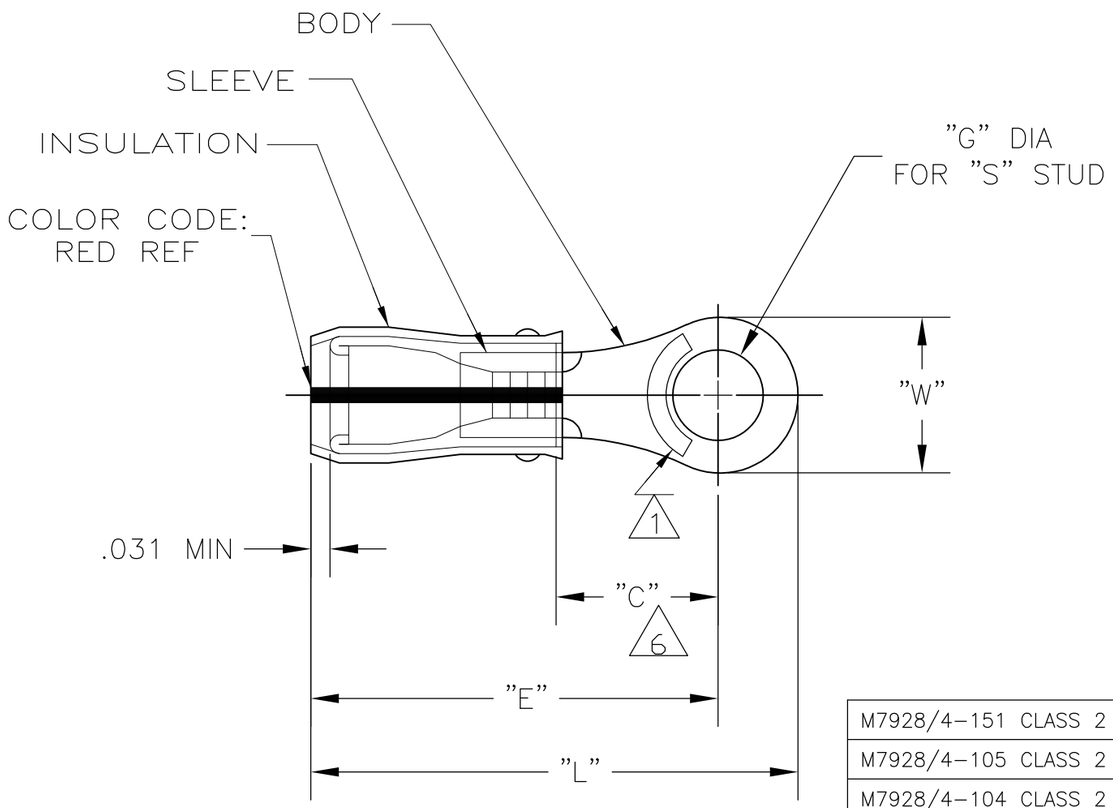

1. STAMP AMP 22-18* APPROX AS SHOWN 22-16 TERMINALS ARE STAMPED 22-18 IN ACCORDANCE WITH MILITARY SPEC MIL-T-7928 COMMERCIAL WIRE RANGE IS 22-16
2. WIRE INSULATION DIA: .080-.125
3. TONGUE MATERIAL THK: .031±.002
4. BODY & SLEEVE: TIN PLATE PER ASTM B545,
5. BODY & SLEEVE- CU PER ASTM B152 INSULATION - PVF2, COLOR - NATURAL
6. APPLIES FROM EDGE OF METAL WIRE BARREL TO CENTER OF STUD HOLE.

MILITARY P/N & CLASS	"W"	"C"	"E"	"G" DIA	"S"	"L"	QTY	PACKAGE TYPE	PART NO
M7928/4-151 CLASS 2	.713	.530 MIN	.934 MAX	.515±.005	1/2"	1.298 MAX	1000	LOOSE PIECE	1-696422-0
M7928/4-105 CLASS 2	.531	.546 MIN	.950 MAX	.390±.005	3/8"	1.223 MAX	1000	LOOSE PIECE	696422-9
M7928/4-104 CLASS 2	.469	.437 MIN	.841 MAX	.328±.005	5/16"	1.083 MAX	1000	LOOSE PIECE	696422-8
M7928/4-150 CLASS 2	.469	.437 MIN	.841 MAX	.265±.005	1/4"	1.083 MAX	1000	LOOSE PIECE	696422-7
M7928/4-103 CLASS 2	.312	.281 MIN	.685 MAX	.197±.003	#10	.849 MAX	1000	LOOSE PIECE	696422-6
M7928/4-149 CLASS 2	.312	.281 MIN	.685 MAX	.171±.003	#8	.849 MAX	1000	LOOSE PIECE	696422-5
M7928/4-102 CLASS 2	.250	.250 MIN	.654 MAX	.145±.003	#6	.787 MAX	1000	LOOSE PIECE	696422-4
M7928/4-101 CLASS 2	.218	.156 MIN	.560 MAX	.145±.003	#6	.677 MAX	1000	LOOSE PIECE	696422-3
M7928/4-148 CLASS 2	.218	.156 MIN	.560 MAX	.119±.003	#4	.677 MAX	1000	LOOSE PIECE	696422-2

AMP INCORPORATED
CUSTOMER SERVICE SYSTEMS

FOR ADDITIONAL PRODUCT INFORMATION OR COPIES OF DRAWINGS AND TECHNICAL DOCUMENTS	PRODUCT INFORMATION CENTER 1-800-522-6752
FOR APPLICATION TOOLING INFORMATION	TOOLING ASSISTANCE CENTER 1-800-722-1111
FOR ORDER ENTRY	1-800-526-5142

THIS DRAWING IS A CONTROLLED DOCUMENT FOR AMP INCORPORATED. IT IS SUBJECT TO CHANGE AND THE CONTROLLING ENGINEERING ORGANIZATION SHOULD BE CONTACTED FOR THE LATEST REVISION.

MAX RECOMMENDED OPERATING TEMPERATURE: 150°C MAX

VOLTAGE RATING: -

CIRCULAR MIL AREA: 0.26-1.65mm² [509-3,260] STRANDED

THIS DRAWING IS A CONTROLLED DOCUMENT.

DIMENSIONS: INCHES

TOLERANCES UNLESS OTHERWISE SPECIFIED:
0 PLC ± -
1 PLC ± -
2 PLC ± -
3 PLC ± -
4 PLC ± -
ANGLES ± -

MATERIAL - 5

FINISH - 4

DWN	JR RUTH	22JUL05
CHK	T MICHIELUTTI	22JUL05
APVD	T MICHIELUTTI	22JUL05
PRODUCT SPEC	—	
APPLICATION SPEC	—	
WEIGHT	—	

Tyco Electronics
Tyco Electronics Corporation
Harrisburg, Pa 17105-3608

NAME: TERMINAL, RING TONGUE, PVF2 , P.I.D.G. WIRE SIZE: 22-16 AWG

SIZE	CAGE CODE	DRAWING NO	RESTRICTED TO
A3	00779	C-696422	—

CUSTOMER DRAWING | SCALE 4:1 | SHEET 1 OF 1 | REV A1