Typ	A ± 0.3	B ± 0.1	C ±0.3	D ±3.0	E ± 0.3	∅F min.	∅F max.	G ± 0.3	H ±0.3	J ±0.3	K ±0.3	L	M ± 0.3	N ± 0.3	O ± 0.3
FWA1GA	39.8	25.0	16.5	52.0	17.0	6.0	8.0	20.0	13.0	20.2	27.5	3.0-3.5	5.0	36.4	28.75
FWA2GA	48.5	33.3	16.5	52.0	25.0	6.0	8.0	28.0	13.0	20.2	27.5	3.0-3.5	5.0	36.4	28.75

FOR REAR MOUNTED CONNECTORS

PANEL THICKNESS 1-2mm FOR SAFE CONTACT AREA

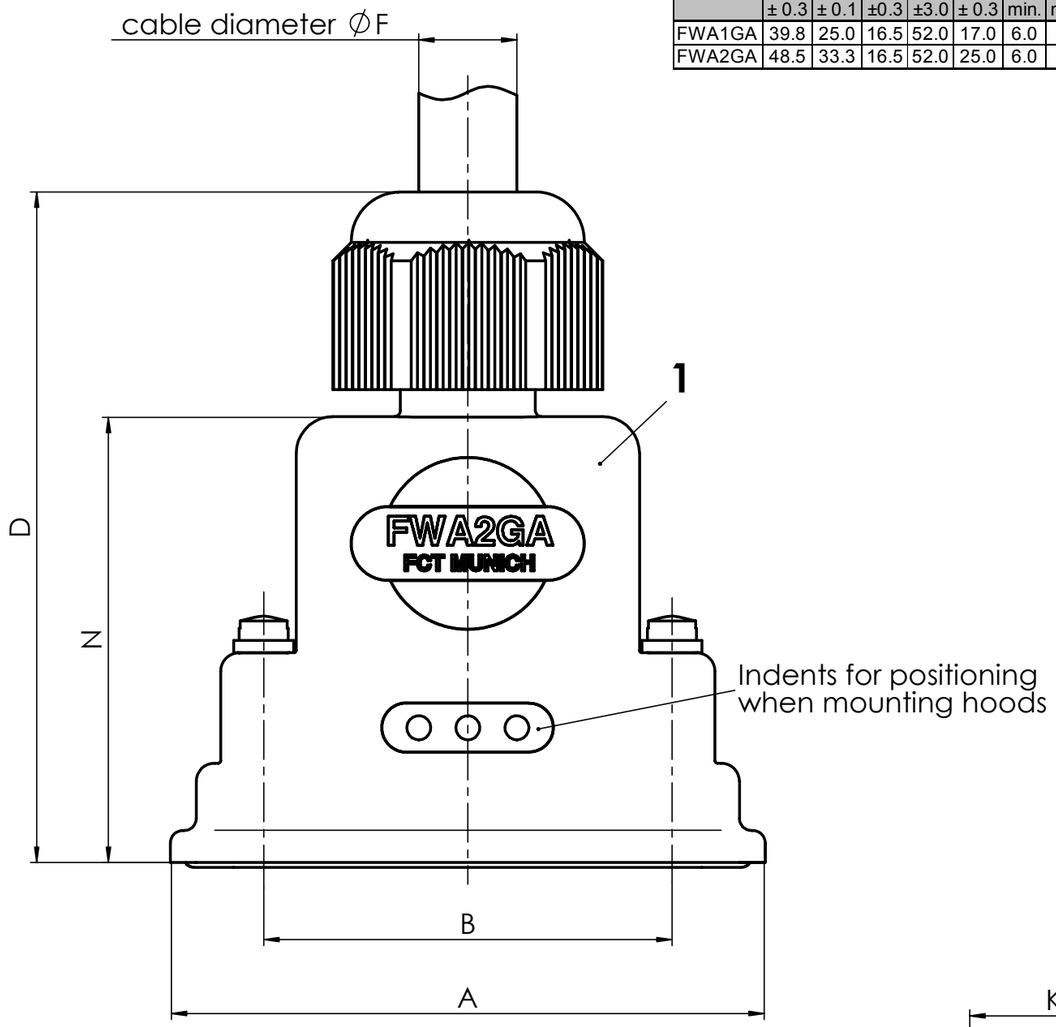

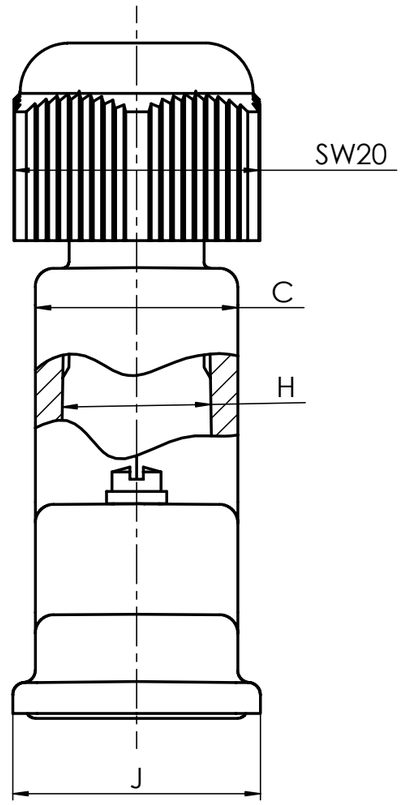

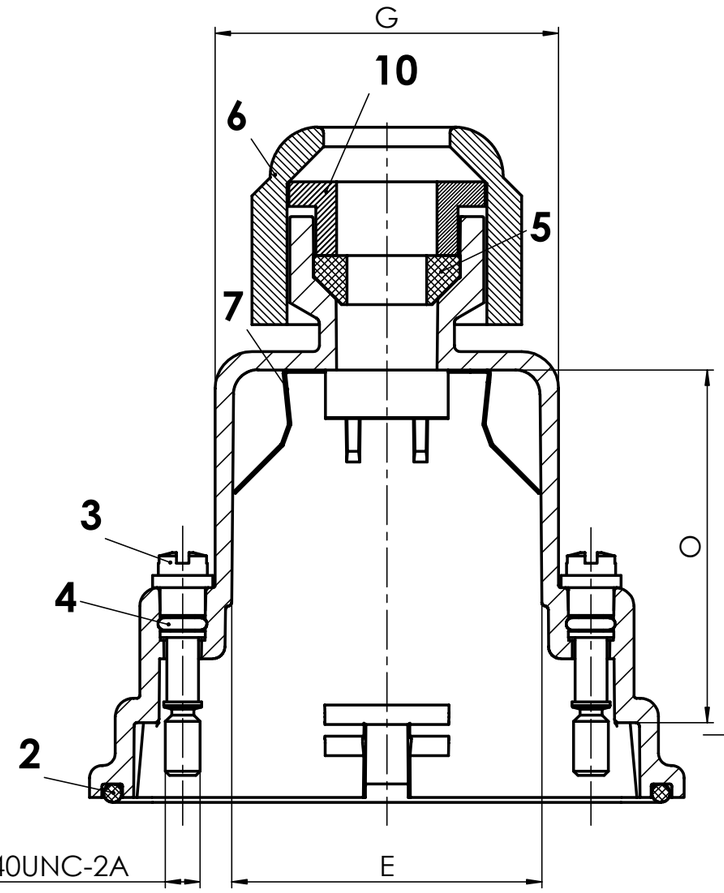

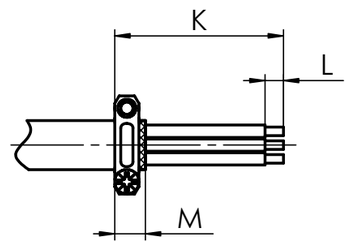

Parts 8 and 9 not mounted!

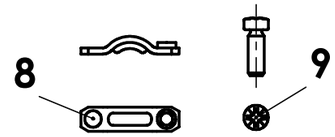

Mounting instructions

Insert cable into hood before stripping,
cable clamp assembling and connector mounting.
The peeled back cable braiding must not extend over
the cable clamp, in order not to damage the gasket or
to impair its performance.

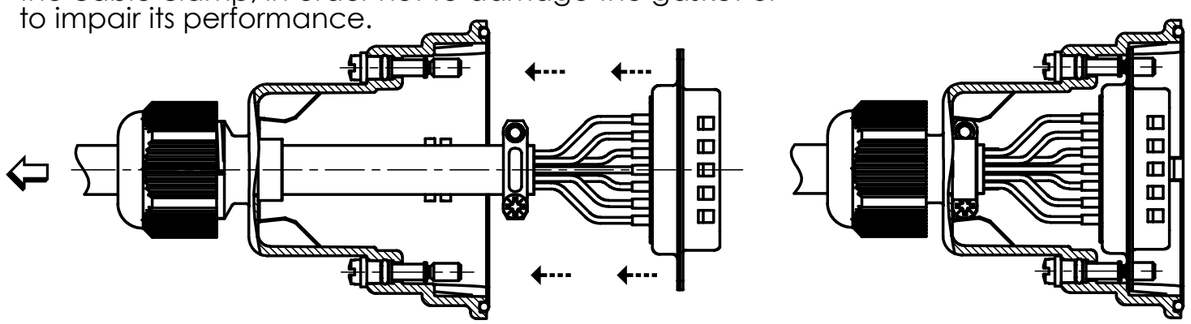

Pull back cable until cable clamp snaps into shielding plate.
Snap connector into hood.

10	1	Washer	Aluminium	nickel plated
9	2	Cable clamp screw	Steel	zinc plated
8	2	Cable clamp	Steel	zinc plated
7	1	Shielding plate	Bz4	tin plated
6	1	Nut	ABS	nickel plated
5	1	Rubber gasket	Nitril	black
4	2	O-Ring seal	Silicone	red
3	2	Slotted head screw	Brass	nickel plated
2	1	O-Ring seal	Silicone	red
1	1	Hood	ABS	nickel plated
No.	*St.*	*Part*	*Type Description/Material*	*Surface plating/Colour/Class*

			Measurement without tolerance occ. to ISO 2768-m	SCALE 2:1	TITLE Plastic hood metalized waterproof
			DATE	NAME	
			DRAWN 27-01-2003	cpasch	
			CHECKED 17-04-2003	okappla	
			FCT electronic gmbh München		DWG.NO. FWA1GA-2GA — REV. 1
1		21312			
REV.	DATE	CH.-NO.	ORIGINAL: DIN A3-DRAWING AS A FILE		REPLACEMENT FOR: — PAGES 1

COMMENT:
ALL RIGHTS ARE RESERVED BY US FOR THIS DRAWING, WITHOUT OUR PRIOR CONSENT,
IT MAY NEITHER BE DUBLICATED NOR MADE AVAILABLE TO A THIRD PARTY,
AND IT ALSO MAY NOT BE IMPROPERLY USED BY TE RECEIVER, OR A THIRD PARTY.