THIS DRAWING IS UNPUBLISHED. RELEASED FOR PUBLICATION AUGUST ,2006.
© COPYRIGHT 2006 BY TYCO ELECTRONICS CORPORATION. ALL RIGHTS RESERVED.

LOC	DIST
E	B

REVISIONS

P	LTR	DESCRIPTION	DATE	DWN	APVD
	C	ECR-06-018891	25AUG06	JMS	FWK

NOTES:

1. PACK IN ACCORDANCE WITH AMP SPEC 107-3275
2. 100 TRAY PACK IN ACCORDANCE WITH AMP SPEC 107-3275
3. Au PLATING
4. Ni PLATING
5. THIS ITEM MUST BE WHITE
6. HAND TOOL : 9-1478240-0
7. DIE SET : 9-1478242-0
8. ELECTRICAL CHARACTERISTICS
   - FREQUENCY RANGE: DC – 4 GHz
   - NOMINAL IMPEDANCE: 50 Ohm
   - INSULATION RESISTANCE: 5000 MOhm
   - WORKING VOLTAGE: 500 Volts RMS at Sea Level
   - DIELECTRIC WITHSTAND VOLTAGE: 1500 Volts RMS Max
   - CONTACT RESISTANCE:
   - CENTRE CONTACT: 1.50 mOhm Max
   - OUTER CONTACT: 0.20 mOhm Max
   - VSWR @ 4GHz: 1.35:1 Max
   - INSERTION LOSS dB @ x 3 GHz: 0.30 Max
9. MECHANICAL CHARACTERISTICS
   - COUPLING RETENTION FORCE: 445N Min
   - CABLE RETENTION FORCE: 170N Min
   - DURABILITY: 500 Cycles Min
10. ENVIRONMENTAL CHARACTERISTICS
    - OPERATING TEMPERATURE: –65 to +165 DegC
11. FOR TECHNICAL DATA REFER TO YOUR LOCAL TYCO ELECTRONICS SALES OFFICE
12. ALL DIMENSIONS ARE NOMINAL FOR REFERENCE ONLY UNLESS OTHERWISE STATED

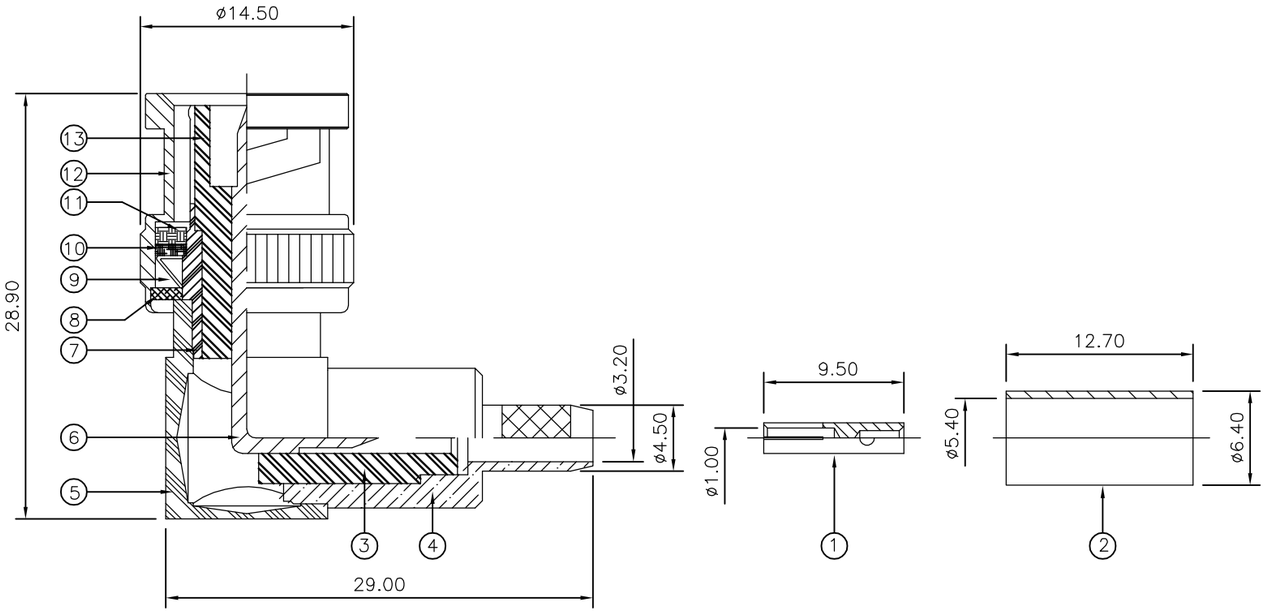

RECOMMENDED CENTRE CONTACT A/F HEX

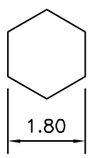

RECOMMENDED CRIMP SLEEVE A/F HEX

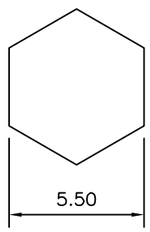

RECOMMENDED CABLE STRIPPING DIM'S

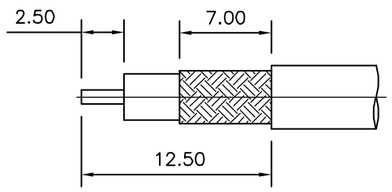

QUANTITY PER ASSY				PARTS LIST		
		1	1	PTFE	INSULATION	13
		1	1	BRASS (4)	SHELL	12
		1	1	SILICON RUBBER (5)	GASKET	11
		1	1	BRASS (4)	WASHER	10
		1	1	SPRING STEEL (4)	SPRING	9
		1	1	BRASS (4)	WASHER	8
		1	1	BRASS (4)	BODY 2	7
		1	1	BRASS (3)	CONTACT II	6
		1	1	BRASS (4)	BODY 1	5
		1	1	BRASS (4)	CHASISS	4
		1	1	PTFE	INSULATION	3
		1	1	BRASS (4)	FERRULE	2
		1	1	BRASS (3)	CONTACT I	1
		6--0	1--0	MATERIAL	DESCRIPTION	ITEM
		(2)	(1)			

THIS DRAWING IS A CONTROLLED DOCUMENT.

DIMENSIONS: mm

TOLERANCES UNLESS OTHERWISE SPECIFIED:
0 PLC ± –
1 PLC ± –
2 PLC ± –
3 PLC ± –
4 PLC ± –
ANGLES ± –

MATERIAL: SEE TABLE

FINISH: –

DWN J.SANDWELL 25AUG06
CHK S.PARLOW 25AUG06
APVD F.WHEELER-KING 25AUG06
PRODUCT SPEC –
APPLICATION SPEC 411-3247
WEIGHT –

tyco Electronics

Tyco Electronics Corporation
Bideford EX39 4HE

NAME
BNC ELBOW PLUG CRIMP 50 OHM
RG58C/U, 141A/U, URM43, 76, KX15
–

SIZE	CAGE CODE	DRAWING NO	RESTRICTED TO
A3	00779	C-1337544	–

CUSTOMER DRAWING | SCALE NTS | SHEET 1 OF 1 | REV C

AMP 1470-19 REV 31MAR2000