NOTES:
1.MATERIAL:
METAL SHELL: BRASS
HOUSING: HIGH TEMP THERMOPLASTIC,UL94V-0,COLOR:BLACK
INSERT: HIGH TEMP THERMOPLASTIC,UL94V-0,COLOR:BLACK
TERMINAL: PHOSPHOR BRONZE
2.PLATING:
TERMINAL:
CONTACT AREA: GOLD(Au),THICKNESS=50 MICROINCH/1.27 MICROMETER
SOLDER TAIL: TIN(Sn),THICKNESS=100 MICROINCH MINIMUN.
UNDER PLATE: NICKEL (Ni).
METAL SHELL:
SOLDER TAIL: TIN(Sn),THICKNESS=100 MICROINCH MINIMUN.
UNDER PLATE: NICKEL (Ni),(SOLDERING AVAILABLE)
SURFACE APPEARANCE: BRIGHT.
3.RECOMMENDED PCB THICKNESS: 1.60±0.05
4.PRODUCT SPECIFICATION REFER TO PS-48146-001
5.TEST SUMMARY REFER TO TS-48146-001
6.PACKAGING SPECIFICATION REFER TO PK-48146-001.
7.LEAD FREE AND ROHS COMPLIANT PRODUCT.

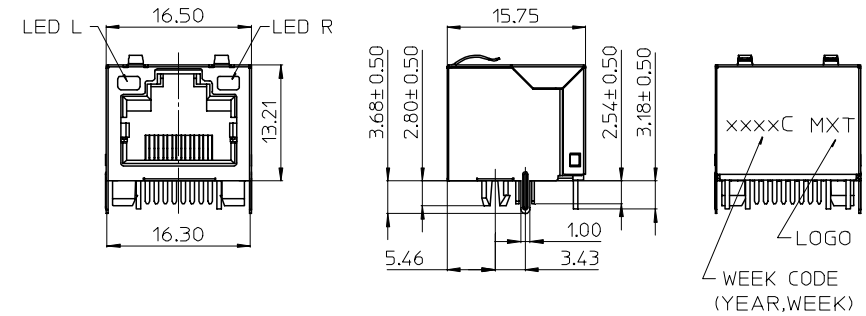

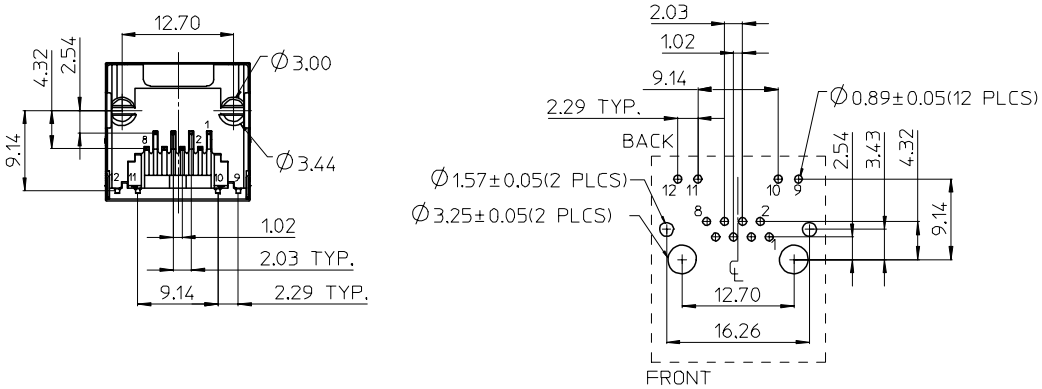

P.C.B LAYOUT

LED ELECTRICAL SPECIFICATION

PARAMETER	GREEN (TYP.)		AMBER (TYP.)		UNITS	TEST CONDITIONS
POWER DISSIPATION	105		100		mW	
REVERSE VOLTAGE	5		5		V	
PEAK WAVELENGTH	565		600		nm	IF=20mA
FORWARD VOLTAGE	2.2	MAX.=2.5	2.1	MAX.=2.5	V	IF=20mA

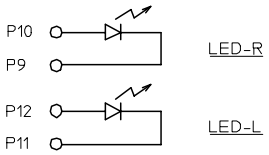

LED SCHEMATIC

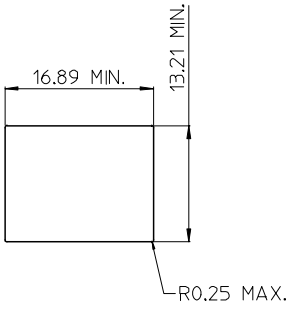

RECOMMENDED PANEL CUTOUT

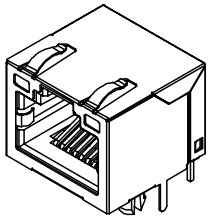

P/N	LED COLOR	
	LEFT	RIGHT
48146-0001	GREEN	GREEN
48146-0011	GREEN	AMBER
48146-0010	AMBER	GREEN

REV	DESCRIPTION
B	ADD NEW P/N
	EC NO: SH2007-0138 2006/09/12
	DRWN:ALLIN 2006/09/13
	CHKD:
	APPR:WWSCHANG 2006/09/13

QUALITY SYMBOLS
▼=0
(C)=0

GENERAL TOLERANCES (UNLESS SPECIFIED)

	mm	INCH
4 PLACES	± ---	± ---
3 PLACES	± ---	± ---
2 PLACES	± 0.25	± ---
1 PLACE	± 0.25	± ---
ANGULAR ± 3 °		

DRAFT WHERE APPLICABLE MUST REMAIN WITHIN DIMENSIONS

DIMENSION STYLE: MM ONLY
SCALE: 1:1
DESIGN UNITS: METRIC
THIRD ANGLE PROJECTION

DRAWN BY: LINDA	DATE: 2004/07/27	TITLE: CATEGORY 5 MODULAR JACK 8 POSITION, 8 CONTACTS
CHECKED BY: ALLIN	DATE: 2004/07/27	
APPROVED BY: WWSCHANG	DATE: 2004/07/27	molex MOLEX INCORPORATED
MATERIAL NO.: SEE TABLE		DOCUMENT NO.: SD-48146-001 — SHEET NO.: 1 OF 1

SIZE A3

THIS DRAWING CONTAINS INFORMATION THAT IS PROPRIETARY TO MOLEX INCORPORATED AND SHOULD NOT BE USED WITHOUT WRITTEN PERMISSION