THIS DRAWING IS UNPUBLISHED. RELEASED FOR PUBLICATION – ,N/A .
© COPYRIGHT N/A By – ALL RIGHTS RESERVED.

LOC	DIST
—	—

REVISIONS

P	LTR	DESCRIPTION	DATE	DWN	APVD
	AJ	REV PER ECO 15-005929	5-12-15	CT	DM

1. THIS RECEPTACLE WILL MATE WITH ANY 5C5, SIZE 3 PLUG IN AMPLIMITE SERIES.
2. USE (5) POWER 8, OR COAX SOCKET CONTACTS. CONSULT PRODUCT ENGINEERING FOR MORE DETAILS.

3. CADMIUM PER QQ-P-416.
4. FINISH: TIN PER ASTM-B-545 .000200 MIN THK OVER COPPER PER AMS2418 .000100-.000200 THK.
5. ALL EXCEPT FOR 212059-5 AND 212059-6.
6. 4-40 UNC-3B CLINCH NUT, 2 REQ'D.
7. CUSTOMER PART NO. INK STAMPED FAR SIDE.
8. UL/CSA DESIGNATION STAMPED IN THIS AREA, OPTIONAL.
9. STEEL PER ASTM-A-109.
10. BRASS PER ASTM-B-36.
11. GOLD PLATED PER MIL-G-45204 OVER COPPER PER AMS2418.
12. FINISH: TIN PER ASTM-B-545 .000400 MIN THK OVER COPPER PER AMS2418 .000050 MIN THK.
13. ZINC PLATE PER ASTM-B-633, .000200-.000400 THK WITH SUPPLEMENTARY CHROMATE (Cr3+)

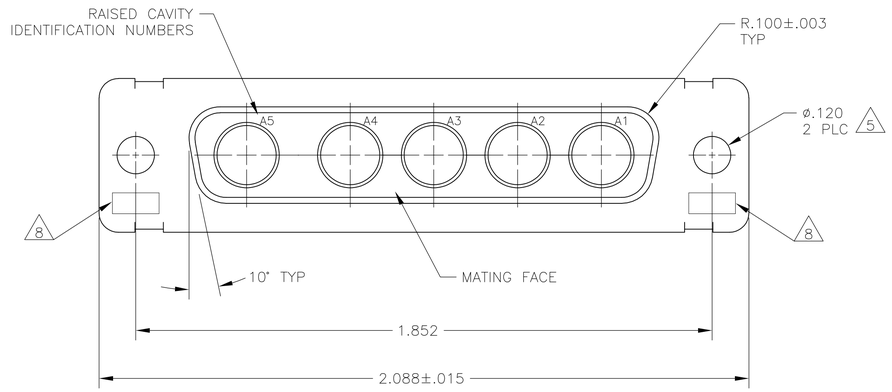

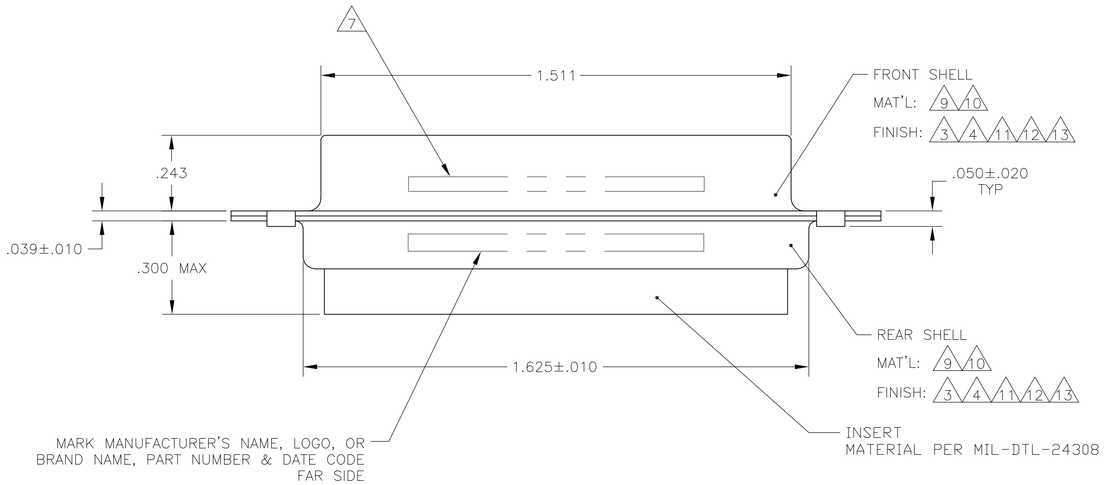

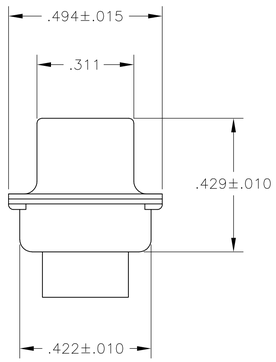

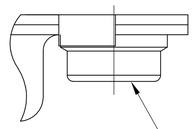

CLINCH NUT #4-40UNC
2 REQ'D
MAT'L: CARBON STEEL
FINISH: PLATED ZINC YELLOW CHROMATE
212059-5 ONLY

CUSTOMER PART NO	REMARKS	PART NO.
–	5 6 9 12	5-212059-5
–	9 13	5-212059-1
B010942-0008	7 10 11	1-212059-3
B010942-0007	7 10 11	1-212059-1
–	9 12	1-212059-0
–	9 12	212059-9
–	–	212059-8
B010942-0016	7 10 11	212059-7
311P405-10S-B-15	7 10 11	212059-6
–	4 5 6 9	212059-5
97942-645A935H01	3 7 9	212059-4
–	4 9	212059-3
311P405-10S-B-12	7 10 11	212059-2
–	3 9	212059-1

THIS DRAWING IS A CONTROLLED DOCUMENT.

DIMENSIONS: INCHES

TOLERANCES, UNLESS OTHERWISE SPECIFIED:
0 PLC ± –
1 PLC ± –
2 PLC ± –
3 PLC ± .005
4 PLC ± –
ANGLES ± 0°30'

MATERIAL –
FINISH –

DWN T. SHUEY 14JAN88
CHK A.EMADI 26JAN88
APVD A.EMADI 26JAN88
PRODUCT SPEC –
APPLICATION SPEC –
WEIGHT –

TE Connectivity

NAME
RECEPTACLE ASSEMBLY
AMPLIMITE 5C5
SERIES 109, SIZE 3, COAX MIX

SIZE	CAGE CODE	DRAWING NO	RESTRICTED TO
A1	00779	C-212059	–

CUSTOMER DRAWING | SCALE 4:1 | SHEET 1 OF 1 | REV AJ