THIS DRAWING IS UNPUBLISHED. RELEASED FOR PUBLICATION -,- .
© COPYRIGHT - By - ALL RIGHTS RESERVED.

LOC	DIST
AF	50

REVISIONS

P	LTR	DESCRIPTION	DATE	DWN	APVD
	B	REVISED PER ECR-12-013518	24NOV12	KH	PD

1 CONTINUOUS STRIP ON REELS

2 MATING TAB THK TO BE 0.81±0.025 [.032±.001]

3 WIRE SIZE IS [#22-#18] AWG.

4 INSULATION RANGE IS 3.05-3.56[.120-.140] DIA.

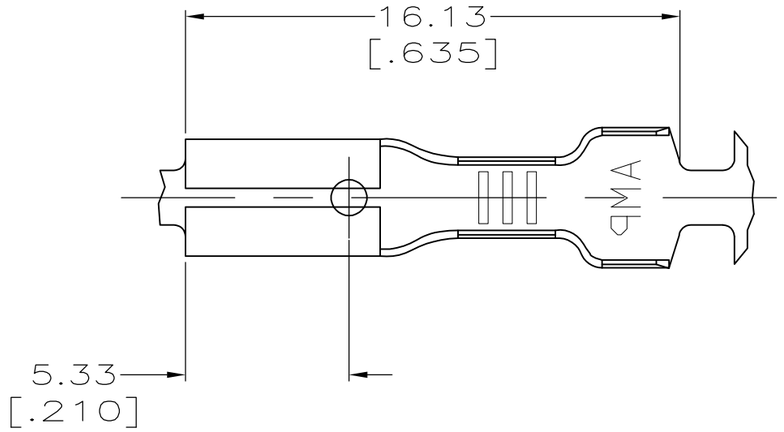

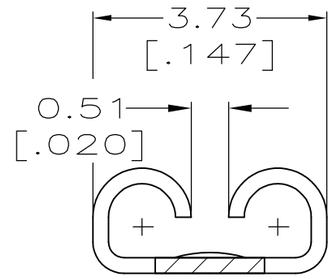

VIEW Z-Z
SCALE 10:1

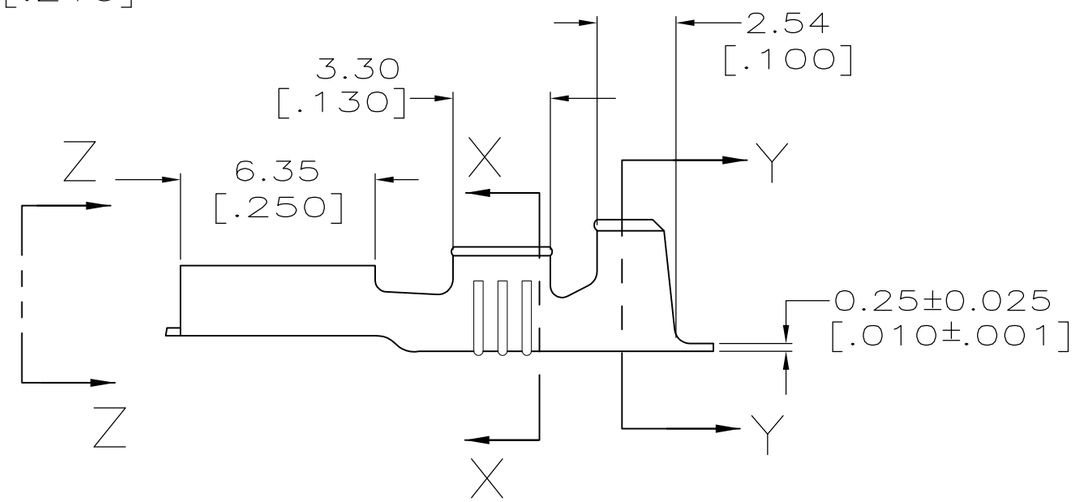

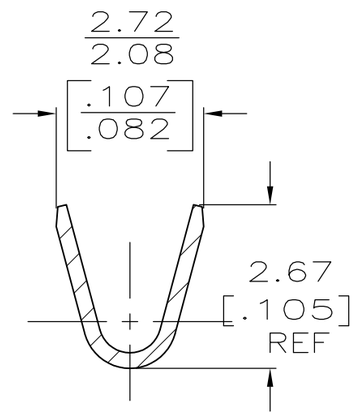

SECTION X-X
SCALE 10:1

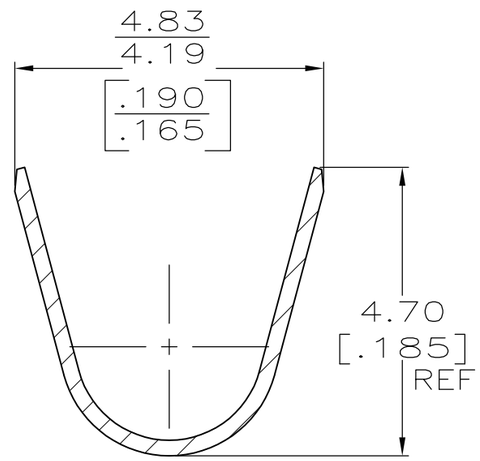

SECTION Y-Y
SCALE 10:1

63954-1
PART NO.

THIS DRAWING IS A CONTROLLED DOCUMENT.

DIMENSIONS: mm [INCHES]

TOLERANCES UNLESS OTHERWISE SPECIFIED:

0 PLC	± -
1 PLC	± -
2 PLC	± -
3 PLC	± 0.25 [.010]
4 PLC	± -
ANGLES	± -

MATERIAL: BRASS
FINISH: PRE-TIN

DWN	JR RUTH	12/6/96
CHK	MS FEHER	12/6/96
APVD	P DESANTIS	12/6/96
PRODUCT SPEC	—	
APPLICATION SPEC	—	
WEIGHT	—	

TE Connectivity

NAME: RECEPTACLE, FASTON, 2.79 [.110] SERIES

SIZE	CAGE CODE	DRAWING NO	RESTRICTED TO
A3	00779	C-63954	—

CUSTOMER DRAWING | SCALE 5:1 | SHEET 1 OF 1 | REV B

1470-19 (3/11)