THIS DRAWING IS UNPUBLISHED. RELEASED FOR PUBLICATION -,- .
© COPYRIGHT - BY TYCO ELECTRONICS CORPORATION. ALL RIGHTS RESERVED.

LOC	DIST
G	14

REVISIONS

P	LTR	DESCRIPTION	DATE	DWN	APVD
	B	REV PER ECR 07-023034	12NOV07	JR	TM
	B1	REVISED PER ECO-09-021826	29AUG09	KK	AEG

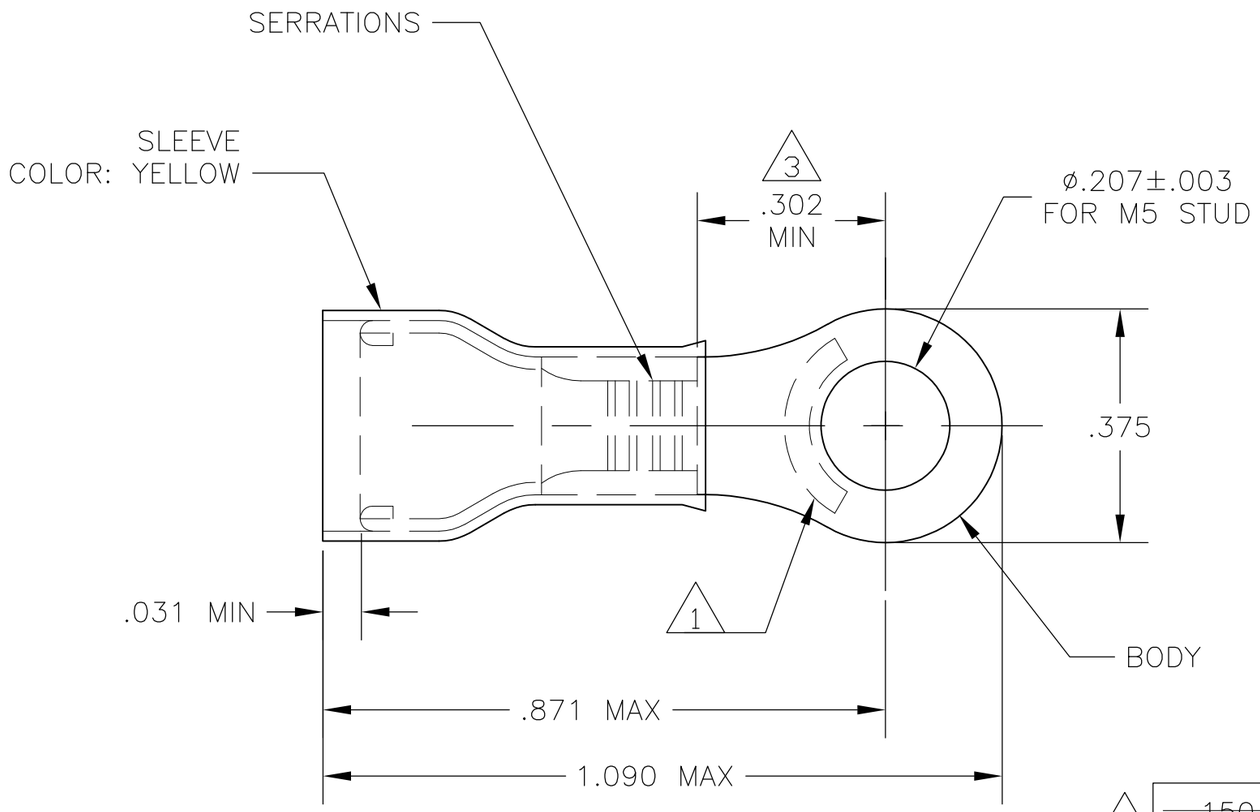

1. STAMP "AMP 12-10*", LOCATION APPROX AS SHOWN.
2. TONGUE THICKNESS IS .039±.002
3. APPLIES TO EDGE OF METAL WIRE BARREL TO CENTER OF STUD HOLE.
4. FOR AMP BRAZIL PRODUCTION ONLY
5. BODY - COPPER PER ASTM B-152
   SLEEVE - COPPER PER ASTM B-152
   INSULATION - NYLON
6. BODY - TIN PL PER ASTM B-545
   SLEEVE - TIN PL PER ASTM B-545
   INSULATION - COLOR - YELLOW
7. 105°C MAX OPERATING TEMPERATURE.
8. 300 VOLT MAX
9. 2.62-6.64mm2 [5,180 - 13,100 CMA]
   SOLID OR STRANDED
10. OBSOLETE PARTS: OBSOLETE CIS STREAMLINING PER D.RENAUD/D.SINISI

WIRE INSULATION OD RANGE	QTY	PACKAGE TYPE	PART NO
~~.150-.250~~ (10)	~~25~~	~~LOOSE PIECE~~	~~8-130171-1~~
.150-.250	2500	REELED ON TAPE	2-130171-1
.170-.300	-	LOOSE PIECE	(4) 130171-1
.150-.250	500	LOOSE PIECE	130171

THIS DRAWING IS A CONTROLLED DOCUMENT.

DIMENSIONS: INCHES

TOLERANCES UNLESS OTHERWISE SPECIFIED:

0 PLC	± -
1 PLC	± -
2 PLC	± -
3 PLC	± .008
4 PLC	± -
ANGLES	± 5°

MATERIAL (5) FINISH (6)

DWN	jr ruth	20FEB06
CHK	T MICHIELUTTI	20FEB06
APVD	T MICHIELUTTI	20FEB06
PRODUCT SPEC	—	
APPLICATION SPEC	—	
WEIGHT	—	

Tyco Electronics

Tyco Electronics Corporation
Harrisburg, PA 17105-3608

NAME: TERMINAL RING TONGUE, PIDG, WIRE SIZE 12:10 —

SIZE	CAGE CODE	DRAWING NO	RESTRICTED TO
A3	00779	C-130171	—

CUSTOMER DRAWING | SCALE 4:1 | SHEET 1 OF 1 | REV B1