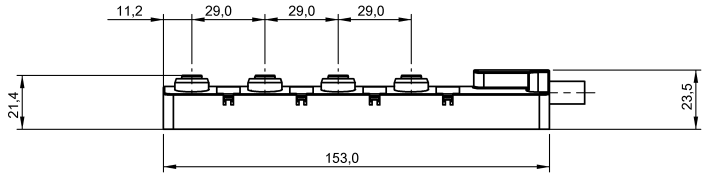

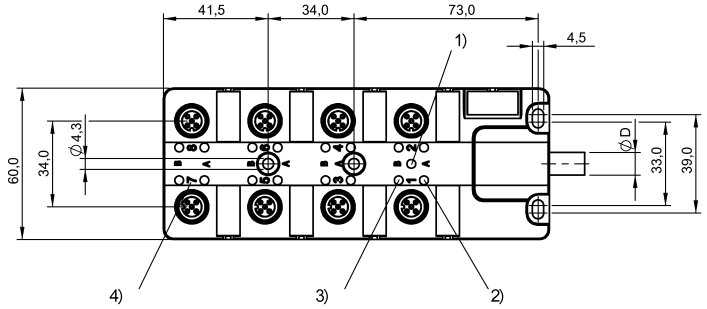

1) Power indicator gn 2) LED ye for Signal 1 (NO) 3) LED ye for Signal 2 (NC) 4) Terminal numbering

Electrical data

Eff. operating voltage Ue DC	24.0 V
Operating voltage UB min. DC	10.0 V
Operating voltage UB max. DC	30.0 V
Load capacity per contact	2 A
Total current max.	12 A
Contact resistance	5 mOhm
Power indicator	LED green
Indicator switching function	16 x LED YE
Function indicator	Yes
Insulation resistance	> 10E9 (ohm)
Sensor connection	M12x1 5-pole female
Electrical version	DC, direct current
Switching output	PNP
Switching function	NO/NC

Mechanical data

Controller connection	Fixed cable
Housing material	PBT, GF
Contact material	CUSn6, pre-nickeled
Contact surface protection	Gold plated
Number of plug-in positions	8 PC
Style	Two-row
Connector type	M12x1
Tightening torque pigtail	0.6 Nm+0.1 (M12 connector)
Mounting type	4 x M4

Sensing data

Tightening torque	1.2 Nm ±0.2 (M4)
Enclosure Type per IEC 60529	IP67 (when connected)

Cable

Number of conductors	19
Conductor cross-section	0.34 mm² + 1.0 mm²
Cable jacket material	PUR
Cable jacket color	black
Cable diameter D	9.7 +/- 0.3 mm
Cable length	5.00 m
Ambient temp. (moving)	-5 °C... 80 °C
Ambient temp. (fixed)	-25 °C... 80 °C
Bending radius tensioned cable	10 x d
Bending cycles (in Mio.)	> 2 Mio.
Ambient temp. (drag chain)	-5 °C... 60 °C

General

Cable structure according to UL-AWM Style 21198/10493
Sheat PUR polyetherurethane DIN VDE 0250, part 818
Flame resistance of the cable per DIN VDE 0472, part 804
Cable material halogen free
Drag chain compatible Yes

Scope of Supply

10x identification labels
2x cover caps

Definitions see general catalog

Subject to change without notice.

000000000000/166728/00000000

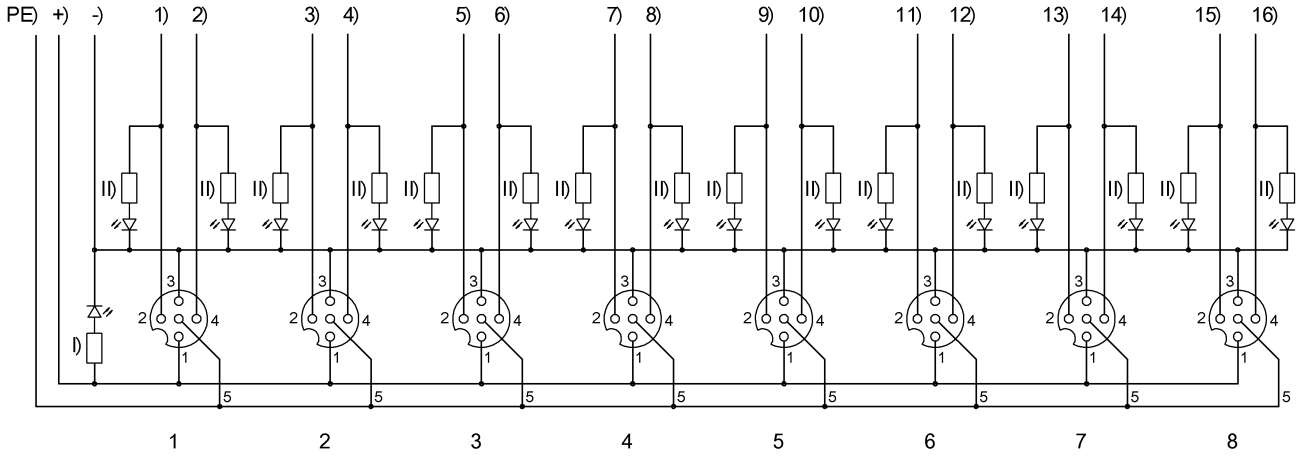

+) brown 1.00 mm² -) blue 1.00 mm² 1) gray/pink 2) white 3) red/blue 4) green 5) white/green 6) yellow 7) brown/green 8) gray 9) white/yellow I) LED green 10) pink 11) yellow/brown 12) red 13) white/gray 14) black 15) gray/brown 16) purple II) LED yellow PE) green/yellow 1.00 mm²

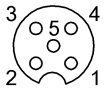

E/A Ports
PIN 1: +24V
PIN 2: NC
PIN 3: 0V
PIN 4: NO
PIN 5: PE