ROHS COMPLIANT

PRODUCT DATA DRAWING

REVISION HISTORY			
REV	DESCRIPTION	DATE	APPROVED
E	DCN 41836	11/15	STW

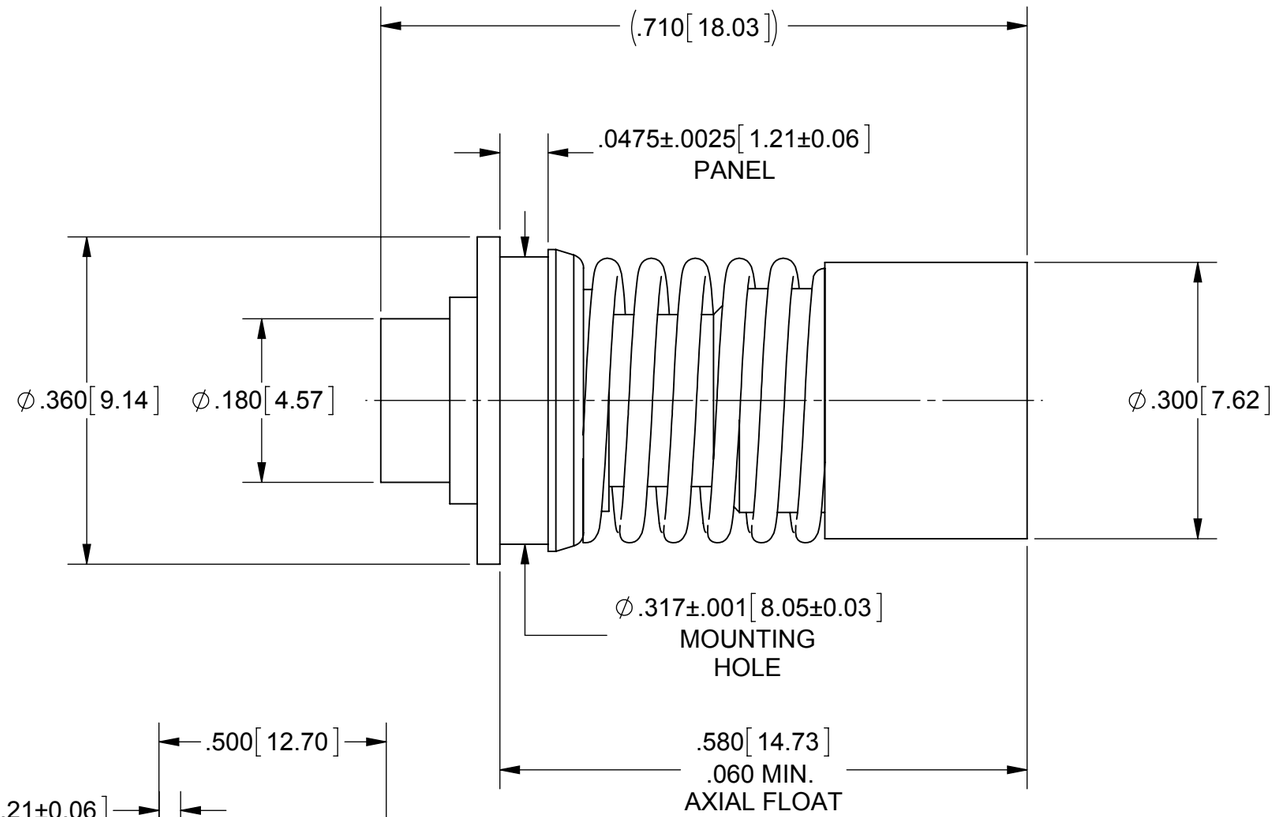

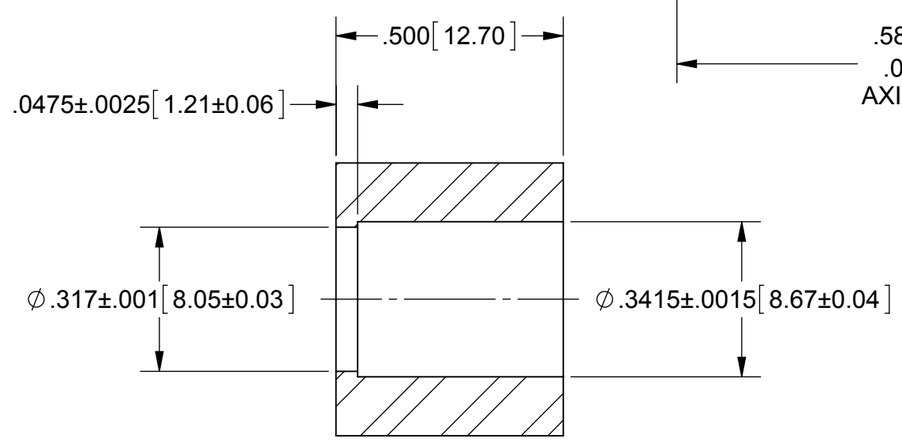

RECOMMENDED MOUNTING HOLE

MATERIAL:

BODY & INSERT:	STAINLESS STEEL PER AMS-5640, ALLOY UNS S30300, TYPE 1
CONTACT, SPRING CLIP, CONTACT SLEEVE & E-RING:	BERYLLIUM COPPER PER ASTM B196, ALLOY No. UNS C17300, TD04
SHIM SPRING:	BERYLLIUM COPPER PER ASTM B194, ALLOY No. UNS C17200, TD04
INSULATOR:	PTFE PER ASTM D1710, TYPE I, GRADE 1, CLASS B
COMPRESSION SPRING:	MUSIC WIRE PER ASTM A228

FINISH:

BODY, INSERT, CONTACTS, SPRING CLIP & SHIM SPRING:	GOLD PER ASTM B488, TYPE II, CODE C, CLASS .76, OVER NICKEL PER AMS-QQ-N-290, CLASS 1, .00005" MIN.
COMPRESSION SPRING:	ZINC PLATED
E-RING:	NICKEL PER AMS-QQ-N-290, CLASS 1, GRADE G

PERFORMANCE:

IMPEDANCE:	50 OHMS
FREQ. RANGE:	DC TO 18.0 GHz

MATERIAL: SEE NOTES

FINISH: SEE NOTES

SURFACE AREA: N/A

PROPRIETARY

THE INFORMATION CONTAINED IN THIS DRAWING IS THE SOLE PROPERTY OF SV MICROWAVE, INC. ANY REPRODUCTION IN PART OR AS A WHOLE WITHOUT THE WRITTEN PERMISSION OF SV MICROWAVE, INC IS PROHIBITED.

DIMENSIONS ARE IN INCHES TOLERANCES:

FRACTIONAL: ±1/64 ANGULAR: X° ±1°0' X°X' ±15'

DECIMAL: .X ±.030 .XX ±.010 .XXX ±.005

INTERPRET DIMENSIONS AND TOLERANCES PER ASME Y14.5M - 1994

THIRD ANGLE PROJECTION

UNLESS OTHERWISE SPECIFIED

1) ALL DIMENSIONS ARE IN INCHES [MILLIMETERS]
2) ALL DIMENSIONS ARE AFTER PLATING.
3) BREAK CORNERS & EDGES .005 R. MAX.
4) CHAM. 1ST & LAST THREADS.
5) SURFACE ROUGHNESS 63₊MIL-STD-10.
6) DIA.'S ON COMMON CENTERS TO BE CONCENTRIC WITHIN .005 T.I.R.
7) REMOVE ALL BURRS

DRAWN:	VMJ 02/04/99
CHECKED:	JM 02/09/99
APPROVED:	JM 02/09/99

Amphenol SV MICROWAVE
2400 Centrepark West Drive, Suite 100
West Palm Beach, FL 33409

TITLE: BMA JACK TO ∅.141 S.R. FLOAT MOUNT

SIZE	CAGE CODE	DWG. NO.
B	95077	1742-6002

SCALE: 6:1 SHEET 1 OF 1