Picor, a Vicor company, provides highly integrated, silicon-centric power conversion and power management solutions. Picor's innovative product leadership is derived from high performance silicon integration, power architectures, and system level packaging. Picor's silicon-centric products complement Vicor's power technology and adhere to Vicor core strategy of innovation and performance. Picor products are marketed and sold via the Vicor sales channel.

Product Portfolio

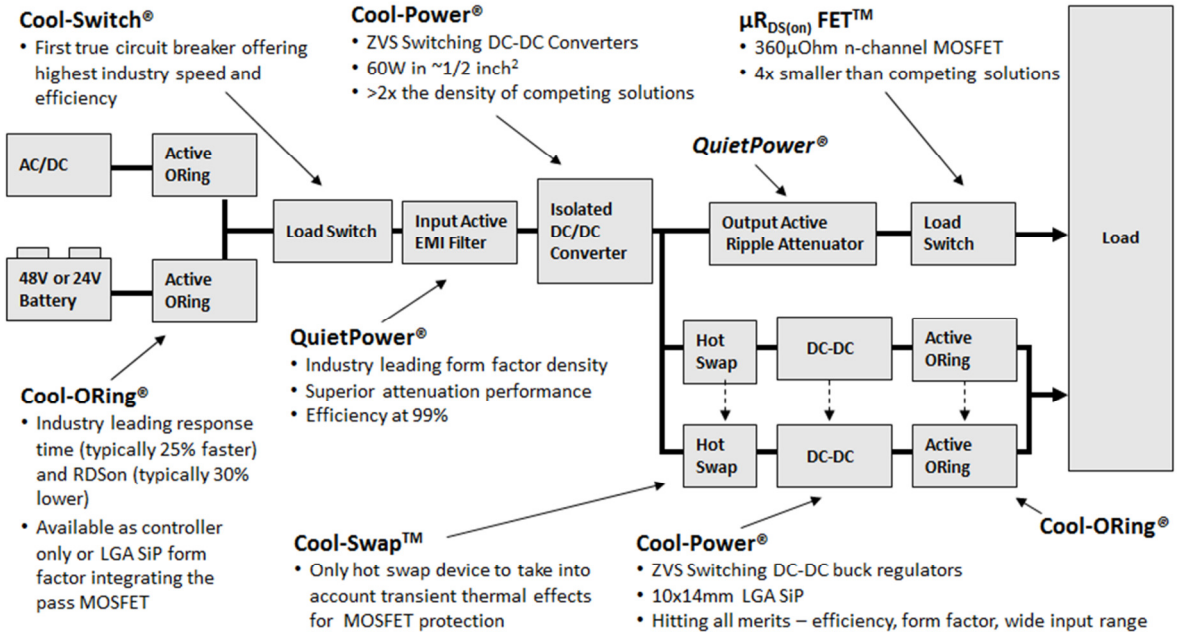

Package Offering

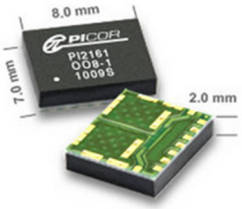

Cool-ORing
Cool-Switch
7x8mm LGA SiP

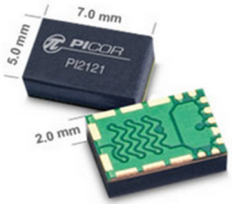

Cool-ORing
5x7mm LGA SiP

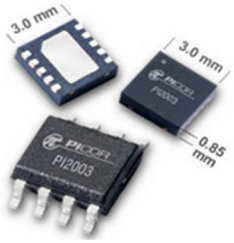

Cool-ORing
Cool-Switch
3x3mm DFN and 5x6mm SOIC

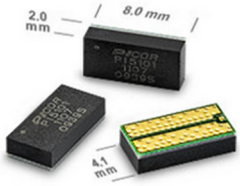

uRDS(on)FET
4.1x8mm LGA Package

Cool-Power
22x16.5mm ½ V·IChip

QuietPower
25x25mm LGA SiP

QuietPower
12.4x25mm LGA SiP

Product Portfolio Information

QuietPower® Active EMI Filters

- Leads the industry in density and size
- Compatible to industry standard DC-DC converters
- Both Input (QPI) and output (QPO) filters
- Packaged in 25x25x4.5mm or 12.4x25x4.5mm LGA open and lidded

QuietPower® Output Filters - QPO

- Reduces power supply output ripple from 1kHz to to 500kHz
- Can reduce output capacitance by a factor of 10

QPO-1LZ	3-30V, 10A Output filter
QPO-1LZ-01	3-30V, 10A Output Filter, Open Frame
QPO-2LZ	0.3-5.5V, 20A Output Filter
QPO-2LZ-01	0.3-5.5V, 20A Output Filter, Open Frame

QuietPower® Input Filters - QPI

- Common-mode (CM) and differential-mode (DM) attenuation
- Covers 150kHz to 30MHz (CISPR22 range)
- Optimized for applications that require EN55022 Class B limits
- Filters cover up to a 48V bus and up to 14A
- QPI-21 is recently released and is Picor's best performing filter

QPI-3LZ	24V, 7A Input Filter
QPI-3LZ-01	24V, 7A Input Filter, Open Frame
QPI-4LZ	48V, 7A Input Filter
QPI-4LZ-01	48V, 7A Input Filter, Open Frame
QPI-5LZ	24V, 14A Input Filter
QPI-5LZ-01	24V, 14A Input Filter, Open Frame
QPI-6LZ	48V, 14A Input Filter
QPI-6LZ-01	48V, 14A Input Filter, Open Frame
QPI-7LZ	24V, 6A Input Filter w/Hot-Swap
QPI-7LZ-01	24V, 6A Input Filter w/Hot-Swap, Open Frame
QPI-8LZ	48V, 6A Input Filter w/Hot-Swap
QPI-8LZ-01	48V, 6A Input Filter w/Hot-Swap, Open Frame
QPI-21LZ	48V, 14A Input Filter
QPI-21LZ-01	48V, 14A Input Filter, Open Frame

QuietPower® V·I Chip Input Filters - QPI

- Optimized for use w/ V·I Chip PRM/VTM Converters

QPI-9LZ	24V, 6A V·I Chip optimized w/Hot-Swap
QPI-9LZ-01	24V, 6A V·I Chip optimized w/Hot-Swap, Open Frame
QPI-10LZ	48V, 6A V·I Chip optimized w/Hot-Swap
QPI-10LZ-01	48V, 6A V·I Chip optimized w/Hot-Swap, Open Frame
QPI-11LZ	24V, 7A V·I Chip optimized
QPI-11LZ-01	24V, 7A V·I Chip optimized, Open Frame
QPI-12LZ	48V, 7A V·I Chip optimized
QPI-12LZ-01	48V, 7A V·I Chip optimized, Open Frame

QuietPower® MIL-COTS Input Filter - MQPI

- Operation from -55°C to 125°C

MQPI-18LP	28V, 7A MIL-COTS Input Filter
MQPI-18LP-01	28V, 7A MIL-COTS Input Filter, Open Frame

QuietPower®

Picor Power Path Management Products

- Lead industry in either efficency/losses, speed, and/or density
- PI2003/PI2207 common pair used for High/Low Oring applications
- Newest family addition is Cool-Swap™ PI2211

Cool-ORing® - High performance Active ORing solutions

- For high availability systems using redundant power architectures
- Replaces common diode schemes w/ a more efficient solution
- Packaged as controller only or Controller w/ MOSFET SIP solution
- Extremly fast turn off at 80nS
- SiPs offer extremly low losses with 8.5mOhm resistance (PI2127)

Cool-ORing® - Controllers

PI2001-00-QEIG	ORing Controller, 5x6mm SOIC
PI2001-00-SOIG	ORing Controller, 3x3mm DFN
PI2002-00-QEIG	ORing Controller w/ Load Disconnect, 3x3mm DFN
PI2002-00-SOIG	ORing Controller w/ Load Disconnect, 5x6mm SOIC
PI2003-00-QEIG	Low-Side OR-ing Controller, 3x3mm DFN
PI2003-00-SOIG	Low Side OR-ing Controller, 5x6mm SOIC
PI2007-00-QEIG	High-Side OR-ing Controller, 3x3mm DFN

Cool-ORing® - SiP Solutions

PI2121-00-LGIZ	8V, 24A FULL-FUNCTION ACTIVE ORING SIP
PI2122-00-LGIZ	FULL-FUNCTION ACTIVE ORING SIP w/ LOAD DISCONNECT
PI2126-00-LGIZ	30V, 12A FULL-FUNCTION ACTIVE ORING SIP
PI2127-01-LGIZ	60V, 12A FULL-FUNCTION ACTIVE ORING SIP

Cool-Switch® - Electronic Circuit Breaker

- For high availability systems using redundant power architectures
- Replaces common diode schemes w/ a more efficient solution
- Packaged as controller only or controller w/ MOSFET SIP solution

PI2061-00-QEIG	Cool-Switch® Controller 7x8mm LGA SIP
PI2161-01-LGIZ	60V, 12A Cool-Switch SiP Solution 3x3mm DFN

µRDS(on)FET® - 360µOhm RDS(on) 5V, N-Channel MOSFET

- Industry leading performance
- Enables practically lossless designs for high current routing
- Packaged in 4.1 x 8 x 2mm LGA

PI5101-00-LGIZ	5V, 360 MICRO OHM N-CHANNEL MOSFET

Cool-Swap™ - 12V Hot Swap Controller and Electronic Circuit Breaker

- Hot swap protection with Tru-SOA™ and GlitchCatcher Technology
- Packaged in a 4x4x0.85mm 24-pin QFN

PI2211	12V Hot Swap Controller 24-pin QFN

Power Path Management

Cool-Power® DC-DC ZVS Switching Converters

- ZVS core powered devices offering high Vin operating ranges
- HIgh density designs packaged in 10x14mm LGA SIP or 1/2V·IChip

Cool-Power® Isolated DC-DC ZVS Switching Converters

- Complete module solution (Controller + Transformer + FETs)
- 2,250V isolation with safety approvals
- 48Vin devices offer 100V for 100mS surge protection
- All packaged 22x16.5x6.7mm ½ V·IChip package

PI3101-00-HVIZ	48V/3.3V 60W Isolated DC-DC Converter 1/2V·IChip
PI3105-00-HVIZ	48V/12V 50W Isolated DC-DC Converter 1/2V·IChip
PI3106-01-HVIZ	24V/12V 50W Isolated DC-DC Converter 1/2V·IChip
PI3110-01-HVIZ	48V/18V 50W Isolated DC-DC Converter 1/2V·IChip

Cool-Power® MIL-COTS Isolated DC-DC ZVS Switching Converters

- Operation from -55°C to 125°C

PI3106-00-HVMZ	24V/12V MILCOTS Isolated DC-DC Converter 1/2V·IChip

Cool-Power® DC-DC ZVS Switching Buck Regulators

- High efficency performance from 90 to 96%
- Current ouput of 8A+
- Module design with controller + FETs and extrenal inductor
- All packaged in 10x14mm LGA SiP

PI3311	8-36Vin, 1.5Vout Set DC-DC Buck regulator 10x14 LGA SIP
PI3312	8-36Vin, 2.5Vout Set DC-DC Buck regulator 10x14 LGA SIP
PI3301	8-36Vin, 3.3Vout Set DC-DC Buck regulator 10x14 LGA SIP
PI3302	8-36Vin, 5Vout Set DC-DC Buck regulator 10x14 LGA SIP
PI3303	8-36Vin, 12Vout Set DC-DC Buck regulator 10x14 LGA SIP
PI3305	8-36Vin, 15Vout Set DC-DC Buck regulator 10x14 LGA SIP

Cool-Power®