Ceramic High Voltage Disc Capacitors, Class 1

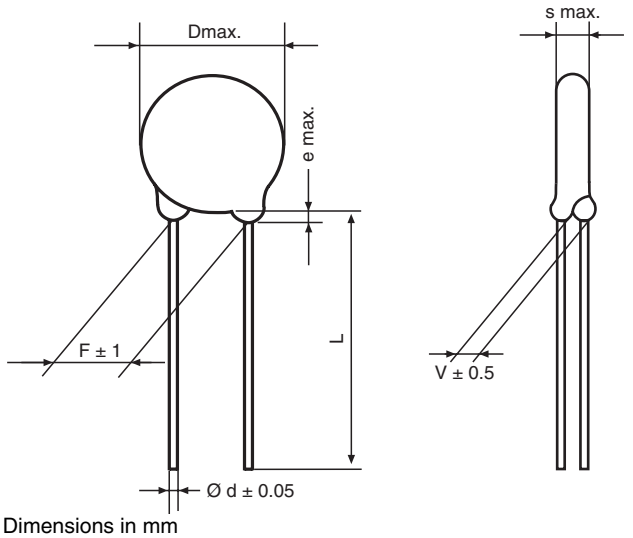

Dimensions in mm

	COATING EXTENSION e	BULK STANDARD LEAD LENGHT L
ALL TYPES	3 max.	30.0 + 0 - 3 or 6.0 ± 1

COATING:

Epoxy dipped, insulating,
Flame retarding acc. to UL 94V-0

TEMPERATURE CHARACTERISTIC OF CAPACITANCE:

See General Information

LEAD CONFIGURATION & TAPING:

See General Information

MARKING:

Capacitance value	Clear text
Capacitance tolerance	With letter code
Rated voltage	Clear text
Ceramic Dielectric	With letter code U
Manufacturers logo	Where D ≥ 13 mm only

DESIGN:

Disc capacitors with epoxy coating

RoHS COMPLIANT

RATED VOLTAGE U_R:

HAU	1 kV_{DC}
HBU	2 kV_{DC}
HCU	3 kV_{DC}
HDU	4 kV_{DC}
HEU	5 kV_{DC}
HFU	6 kV_{DC}

DIELECTRIC STRENGTH BETWEEN LEADS:

Component test

HAU	1750 kV_{DC}, 2 s
HBU	3000 kV_{DC}, 2 s
HCU	5000 kV_{DC}, 2 s
HDU	6000 kV_{DC}, 2 s
HEU	7500 kV_{DC}, 2 s
HFU	9000 kV_{DC}, 2 s

DISSIPATION FACTOR tan δ:

C < 30 pF: $\left(\frac{100}{C} + 7\right) \bullet 10^{-4}$

C ≥ 30 pF: $\leq 10 \bullet 10^{-4}$

INSULATION RESISTANCE R_{IS}:

$\geq 1 \bullet 10^{10}\ \Omega$

CATEGORY TEMPERATURE RANGE ϑ_A:

(- 40 to + 85) °C

CLIMATIC CATEGORY ACC. TO EN 60068-1:

40 / 085 / 21

ORDERING INFORMATION

HAU	220	K	BA	CD0	K	R
MODEL	CAPACITANCE VALUE	TOLERANCE	RATED VOLTAGE	LEAD CONFIGURATION	INTERNAL CODE	RoHS COMPLIANT

ORDERING INFORMATION, CERAMIC HIGH VOLTAGE DISC CAPACITORS, 1 KV (DC)							
C (pF)	TOL. (%)	D x s (mm)	F ± 1 * (mm)	d ± 0.05 * (mm)	V ± 0.5 * (mm)	CERAMIC CODE	ORDERING CODE
CLASS 1 N 750							
10	± 10 %	7.0 x 3.0	7.5	0.6	1.4	U	HAU100□BA□□□KR
15		7.0 x 3.0					HAU150□BA□□□KR
22		7.0 x 3.0					HAU220□BA□□□KR
33		8.0 x 3.0					HAU330□BA□□□KR
47		8.0 x 3.0					HAU470□BA□□□KR
68		8.0 x 3.0					HAU680□BA□□□KR
82		8.0 x 3.0					HAU820□BA□□□KR
100		8.0 x 3.0					HAU101□BA□□□KR
150		10.0 x 3.5					HAU151□BA□□□KR
220		11.0 x 3.5					HAU221□BA□□□KR
330		12.5 x 3.5					HAU331□BA□□□KR
470		14.5 x 3.5					HAU471□BA□□□KR
560		16.5 x 3.5					HAU561□BA□□□KR
680		16.5 x 3.5					HAU681□BA□□□KR

ORDERING INFORMATION, CERAMIC HIGH VOLTAGE DISC CAPACITORS, 2 KV (DC)							
C (pF)	TOL. (%)	D x s (mm)	F ± 1 * (mm)	d ± 0.05 * (mm)	V ± 0.5 * (mm)	CERAMIC CODE	ORDERING CODE
CLASS 1 N 750							
10	± 10 %	7.0 x 4.0	7.5	0.6	1.2	U	HBU100□BB□□□KR
15		7.0 x 4.0					HBU150□BB□□□KR
22		7.0 x 4.0					HBU220□BB□□□KR
33		7.0 x 4.0			1.3		HBU330□BB□□□KR
47		7.0 x 4.0			1.4		HBU470□BB□□□KR
68		8.0 x 4.0					HBU680□BB□□□KR
82		8.0 x 4.0					HBU820□BB□□□KR
100		10.0 x 4.2					HBU101□BB□□□KR
150		10.0 x 4.2					HBU151□BB□□□KR
220		12.0 x 4.2					HBU221□BB□□□KR
330		15.0 x 4.2					HBU331□BB□□□KR
470		17.0 x 4.2					HBU471□BB□□□KR

ORDERING INFORMATION, CERAMIC HIGH VOLTAGE DISC CAPACITORS, 3 KV (DC)							
C (pF)	TOL. (%)	D x s (mm)	F ± 1 * (mm)	d ± 0.05 * (mm)	V ± 0.5 * (mm)	CERAMIC CODE	ORDERING CODE
CLASS 1 N 750							
10	± 10 %	7.0 x 4.0	10.0	0.6	1.3	U	HCU100□BC□□□KR
15		7.0 x 4.0					HCU150□BC□□□KR
22		7.0 x 4.0					HCU220□BC□□□KR
33		7.0 x 4.0					HCU330□BC□□□KR
47		8.0 x 4.0			1.4		HCU470□BC□□□KR
68		9.0 x 4.0					HCU680□BC□□□KR
82		10.0 x 4.4		0.8	1.6		HCU820□BC□□□KR
100		10.0 x 4.4					HCU101□BC□□□KR
150		11.0 x 4.4					HCU151□BC□□□KR
220		15.0 x 4.4					HCU221□BC□□□KR
330		17.0 x 4.4					HCU331□BC□□□KR

* Standard lead configuration, other lead spacing and diameter available on request.

ORDERING CODE			
□	7th digit	Capacitance Tolerance	± 10 % = K
□□□	10th to 12th digit	Lead Configuration (See General Information)	
R	14th digit	RoHS Compliant Component	

ORDERING INFORMATION, CERAMIC HIGH VOLTAGE DISC CAPACITORS, 4 KV (DC)							
C (pF)	TOL. (%)	D x s (mm)	F ± 1 * (mm)	d ± 0.05 * (mm)	V ± 0.5 * (mm)	CERAMIC CODE	ORDERING CODE
CLASS 1 N 750							
10	± 10 %	7.0 x 4.3	10.0	0.6	1.4	U	HDU100□BD□□□KR
15		7.0 x 4.3					HDU150□BD□□□KR
22		7.0 x 4.3					HDU220□BD□□□KR
33		7.0 x 4.3			1.9		HDU330□BD□□□KR
47		9.5 x 4.3					HDU470□BD□□□KR
68		9.5 x 4.7		0.8			HDU680□BD□□□KR
82		11.0 x 4.7					HDU820□BD□□□KR
100		11.0 x 4.7					HDU101□BD□□□KR
150		13.0 x 4.7					HDU151□BD□□□KR
220		15.0 x 4.7					HDU221□BD□□□KR
330		17.0 x 4.7					HDU331□BD□□□KR
470		20.0 x 4.7					HDU471□BD□□□KR

ORDERING INFORMATION, CERAMIC HIGH VOLTAGE DISC CAPACITORS, 5 KV (DC)							
C (pF)	TOL. (%)	D x s (mm)	F ± 1 * (mm)	d ± 0.05 * (mm)	V ± 0.5 * (mm)	CERAMIC CODE	ORDERING CODE
CLASS 1 N 750							
22	± 10 %	7.0 x 4.8	12.5	0.6	2.2	U	HEU220□BE□□□KR
33		9.3 x 4.8					HEU330□BE□□□KR
47		9.3 x 4.8					HEU470□BE□□□KR
68		11.8 x 5.2		0.8	2.4		HEU680□BE□□□KR
82		11.8 x 5.2					HEU820□BE□□□KR
100		11.8 x 5.2					HEU101□BE□□□KR
150		14.4 x 5.2					HEU151□BE□□□KR
220		16.3 x 5.2					HEU221□BE□□□KR
330		19.5 x 5.2					HEU331□BE□□□KR

ORDERING INFORMATION, CERAMIC HIGH VOLTAGE DISC CAPACITORS, 6 KV (DC)							
C (pF)	TOL. (%)	D x s (mm)	F ± 1 * (mm)	d ± 0.05 * (mm)	V ± 0.5 * (mm)	CERAMIC CODE	ORDERING CODE
CLASS 1 N 750							
10	± 10 %	7.0 x 4.8	12.5	0.6	2.2	U	HFU100□BF□□□KR
15		7.0 x 4.8					HFU150□BF□□□KR
22		7.0 x 4.8					HFU220□BF□□□KR
33		9.5 x 4.8					HFU330□BF□□□KR
47		9.5 x 4.8					HFU470□BF□□□KR
68		12.0 x 5.2		0.8	2.4		HFU680□BF□□□KR
82		12.0 x 5.2					HFU820□BF□□□KR
100		12.0 x 5.2					HFU101□BF□□□KR
150		15.0 x 5.2					HFU151□BF□□□KR
220		17.0 x 5.2					HFU221□BF□□□KR
330		20.0 x 5.2					HFU331□BF□□□KR

* Standard lead configuration, other lead spacing and diameter available on request.

ORDERING CODE			
□	7th digit	Capacitance Tolerance	± 10 % = K
□□□	10th to 12th digit	Lead Configuration (See General Information)	
R	14th digit	RoHS Compliant Component	

Disclaimer

ALL PRODUCT, PRODUCT SPECIFICATIONS AND DATA ARE SUBJECT TO CHANGE WITHOUT NOTICE TO IMPROVE RELIABILITY, FUNCTION OR DESIGN OR OTHERWISE.

Vishay Intertechnology, Inc., its affiliates, agents, and employees, and all persons acting on its or their behalf (collectively, "Vishay"), disclaim any and all liability for any errors, inaccuracies or incompleteness contained in any datasheet or in any other disclosure relating to any product.

Vishay makes no warranty, representation or guarantee regarding the suitability of the products for any particular purpose or the continuing production of any product. To the maximum extent permitted by applicable law, Vishay disclaims (i) any and all liability arising out of the application or use of any product, (ii) any and all liability, including without limitation special, consequential or incidental damages, and (iii) any and all implied warranties, including warranties of fitness for particular purpose, non-infringement and merchantability.

Statements regarding the suitability of products for certain types of applications are based on Vishay's knowledge of typical requirements that are often placed on Vishay products in generic applications. Such statements are not binding statements about the suitability of products for a particular application. It is the customer's responsibility to validate that a particular product with the properties described in the product specification is suitable for use in a particular application. Parameters provided in datasheets and/or specifications may vary in different applications and performance may vary over time. All operating parameters, including typical parameters, must be validated for each customer application by the customer's technical experts. Product specifications do not expand or otherwise modify Vishay's terms and conditions of purchase, including but not limited to the warranty expressed therein.

Except as expressly indicated in writing, Vishay products are not designed for use in medical, life-saving, or life-sustaining applications or for any other application in which the failure of the Vishay product could result in personal injury or death. Customers using or selling Vishay products not expressly indicated for use in such applications do so at their own risk. Please contact authorized Vishay personnel to obtain written terms and conditions regarding products designed for such applications.

No license, express or implied, by estoppel or otherwise, to any intellectual property rights is granted by this document or by any conduct of Vishay. Product names and markings noted herein may be trademarks of their respective owners.

Material Category Policy

Vishay Intertechnology, Inc. hereby certifies that all its products that are identified as RoHS-Compliant fulfill the definitions and restrictions defined under Directive 2011/65/EU of The European Parliament and of the Council of June 8, 2011 on the restriction of the use of certain hazardous substances in electrical and electronic equipment (EEE) - recast, unless otherwise specified as non-compliant.

Please note that some Vishay documentation may still make reference to RoHS Directive 2002/95/EC. We confirm that all the products identified as being compliant to Directive 2002/95/EC conform to Directive 2011/65/EU.

Vishay Intertechnology, Inc. hereby certifies that all its products that are identified as Halogen-Free follow Halogen-Free requirements as per JEDEC JS709A standards. Please note that some Vishay documentation may still make reference to the IEC 61249-2-21 definition. We confirm that all the products identified as being compliant to IEC 61249-2-21 conform to JEDEC JS709A standards.