MICRO SWITCH
FREEPORT ILLINOIS, U.S.A
A DIVISION OF HONEYWELL
FED. MFG. CODE 91929

SWITCH - BASIC

CATALOG LISTING
BZ-R2430-P1

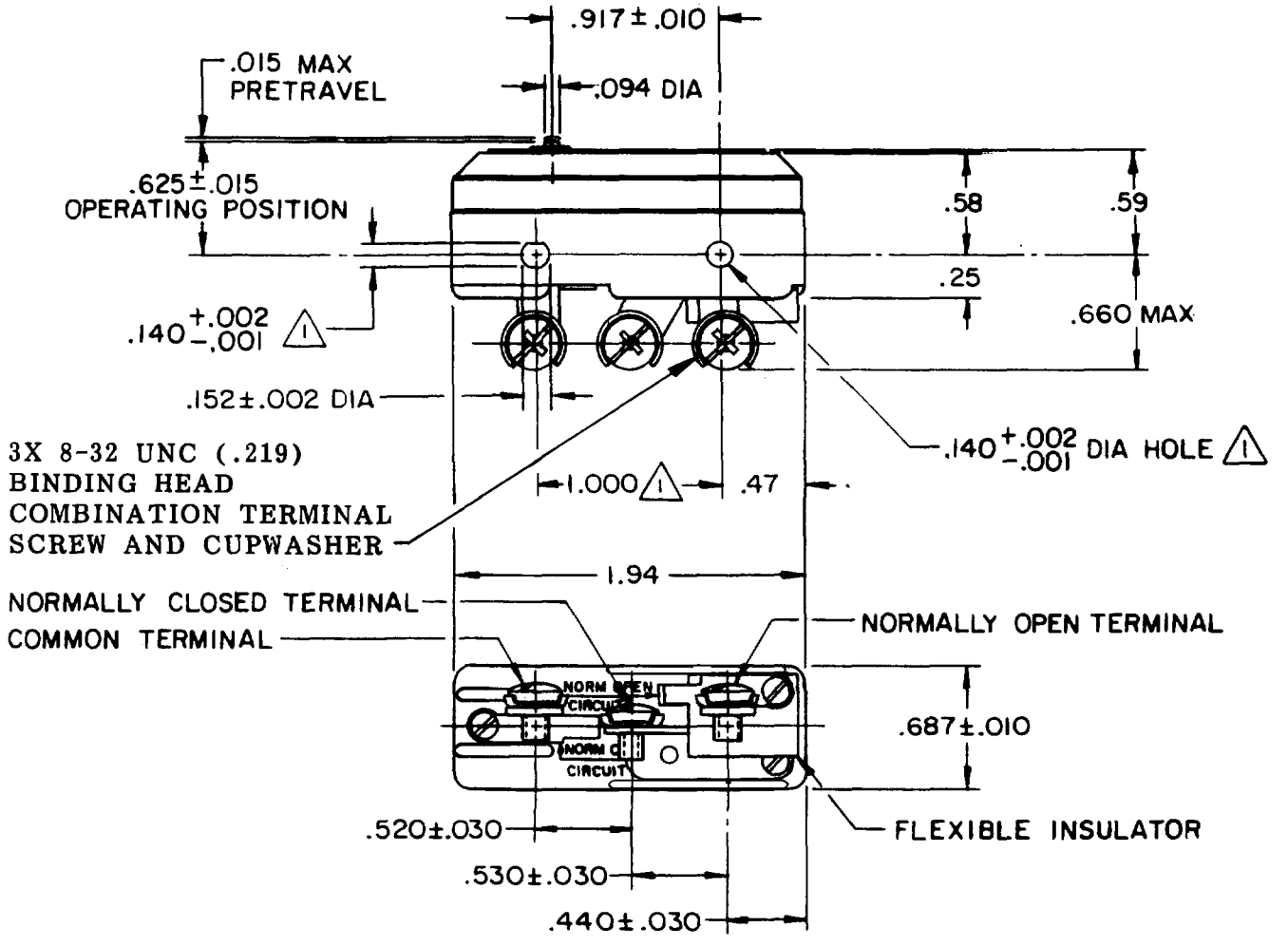

NOTES
1. MOUNTING HOLES WILL ACCEPT PINS OR SCREWS OF .139 MAX DIA ON 1.000±.002 CENTERS
2 - SWITCH WILL WITHSTAND TEMPERATURE OF 400°F FOR 100° HOURS

THIS DRAWING COVERS A PROPRIETARY ITEM AND IS THE PROPERTY OF MICRO SWITCH, A DIVISION OF HONEYWELL. THIS DRAWING IS NOT TO BE COPIED OR USED WITHOUT THE APPROVAL OF MICRO SWITCH.

THIRD ANGLE PROJECTION

CHARACTERISTICS	ELECTRICAL DATA	SCALE FULL — DO NOT SCALE PRINT
OPERATING FORCE ---------7-9 OZ	CONTACT ARRANGEMENT S P D T	UNLESS OTHERWISE SPECIFIED TOLERANCES ARE
RELEASE FORCE ---------4 OZ MIN	5A-125, 250 OR 480 VAC -L34-	ONE PLACE (.0) ±.030
DIFFERENTIAL TRAVEL-.00020-.00035		TWO PLACE (.00) ±.015
OVERTRAVEL ----------.005 MIN		THREE PLACE (.000) ±.005
		ANGLES ±
		WEIGHT .060 LB

CATALOG LISTING BZ-R2430-P1 PAGE 1 OF 1
ISSUE 3
REPLACES X77871-BZ
RELEASE NO. PR-12592

REVISIONS
A CO-73287-G JAL 20 OCT 93
B CO-94212-L DLM 9 FEB 00

CHECK
CHECK KAG 30 NOV 83
CHECK
DRAWN WJM 28 NOV 83
FORMTEK