8TA Connector

Features & Benefits

- Rugged aluminium body to ensure long service life in the harshest environment
- Compact low profile derived from MIL-DTL-38999 Series 2
- 6 gold plated #22D contacts
- Environment sealing from interfacial seal and rear grommet
- Positive locking mechanism with locked colour indicators 3 keyway orientations
- Boot termination feature
- Conductive black zinc plating

Technical characteristics

Mechanical

• Shell	Aluminium alloy
• Shell plating	Conductive black zinc
• Insulator	Thermoplastic
• Seal	Liquid silicone rubber
• Contact	Copper alloy
• Contact plating	Gold
• Endurance	500 matings/unmatings
• Shock resistance	300 g for 3 ms and EIA-364-27
• Vibration resistance	random 100 to 1000 Hz - 1 g^2/Hz
• Contact retention	45 N

Electrical

• Test voltage	1300 Vrms (sea level)
• Contact resistance	<14.6 mΩ
• Insulation resistance	≥ 5000 MΩ (at 500 Vdc)
• Contact rating	5 A
• Shell continuity	<60 mΩ

Climatic

• Temperature range	-55°C to +175°C
• Sealing mated connectors	IP67 (1 metre for 30 min. minimum)
• Salt spray	48 hours

8TA Connector

How to order

Basic series		8TA	0	08	35	P	N
Shell style	**0:** Oval flange receptacle (for front or rear mounting) **1:** In-line receptacle **6:** Plug **7:** Jam nut receptacle						
Shell size	08						
Layout	35 (6 contacts size 22D)						
Type of contact	**P:** Pin contacts **S:** Socket contacts						
Orientation	**N:** Red / **A:** Yellow / **D:** Green						

Protective cap

Basic series		8TA	8	08
Shell style	**8:** Plug protective cap **9:** Receptacle protective cap			
Shell size	08			

Range presentation

Plug

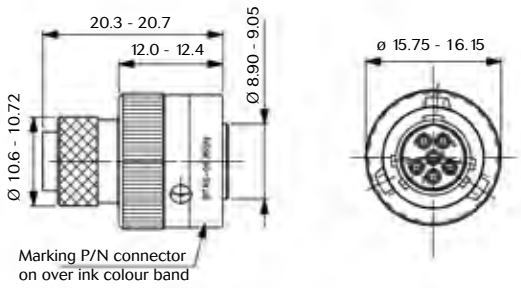

In-line receptacle

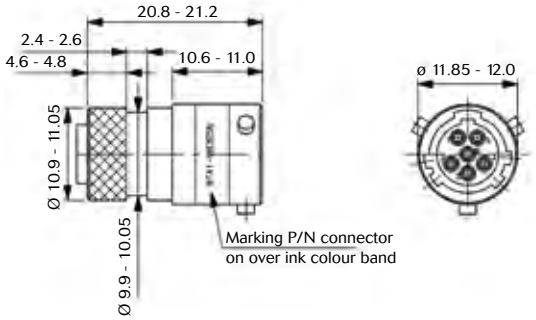

Oval flange receptacle

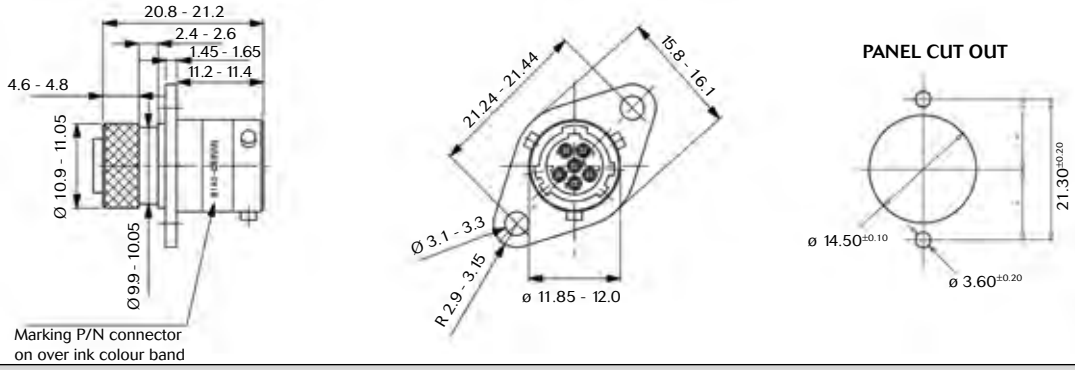

Note : all dimensions are in mm

8TA Connector

Jam nut receptacle

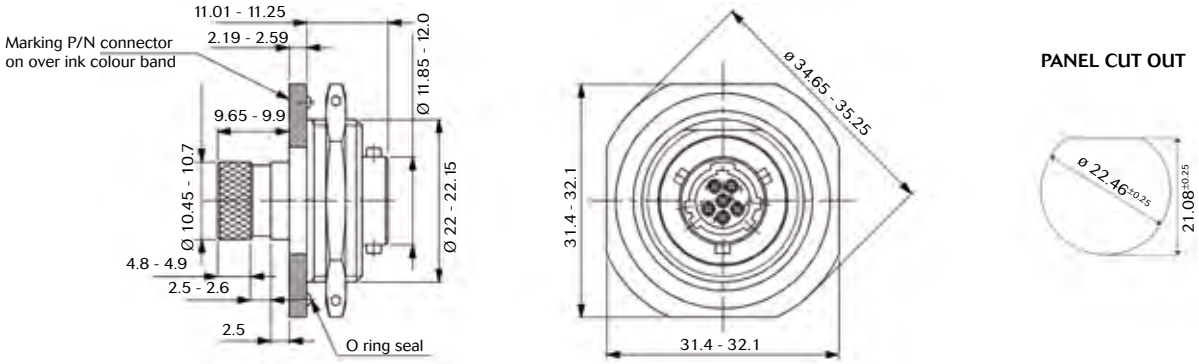

Grounded receptacle

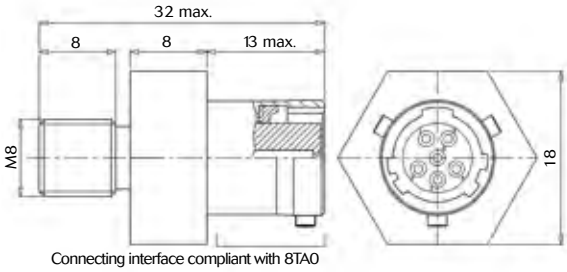

Please consult us for more information

Orientation

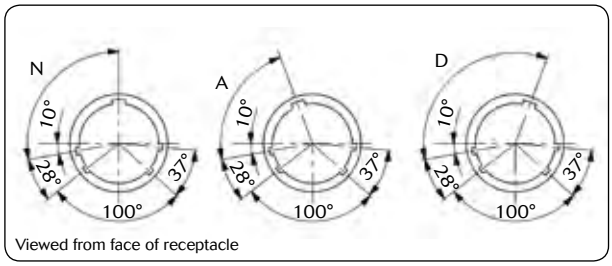

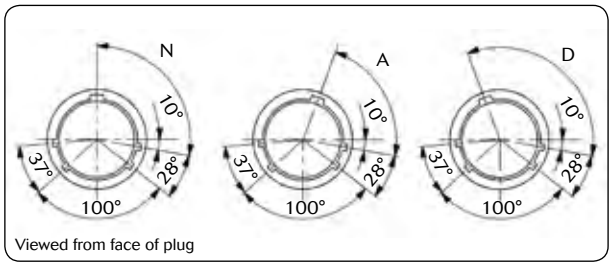

Key positions	Alpha 1	Colour band
N	100°	Red
A	82°	Yellow
D	118°	Green

Note : all dimensions are in mm

8TA Connector

Contacts

Crimped contacts

Contact size	Contact type	Contact Ø max.	Part numbers	Admissible wire section				External dia. over insulation (mm)	
				AWG		mm²			
Crimp contact				Min.	Max.	Min.	Max.	Min.	Max.
22D signal contact	Male	0.76	8599-0702 JJ	28	22	0.095	0.38	0.71	1.37
	Female		8599-0710 900						

Crimping tools

Contact size	Type	Wire sizes	Locator part number		Tool part number	
			Spec.	SOURIAU	Spec.	SOURIAU
22D	Male	22 to 28	M22520/2-09	8476-09	M22520/2-01	8476-01
	Female		M22520/2-06	8476-06		

Accessories

Insertion & extraction tool

Contact size	Part numbers		Colour	
	Spec.	SOURIAU	Insertion	Extraction
22D	M81969/14-01	-	Green	White

Shrinkable termination detail

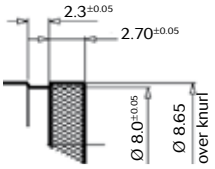

Filler plug

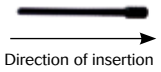

Contact size	Part numbers		Colour
	Spec.	SOURIAU	
22D	MS27488-22	8660-212	Black

Note : all dimensions are in mm