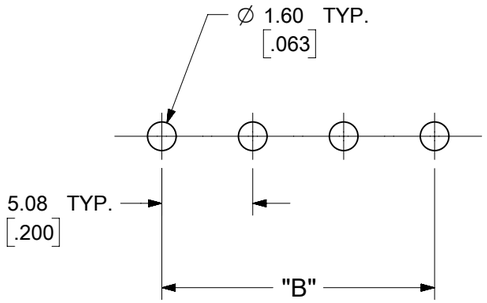

PCB LAYOUT

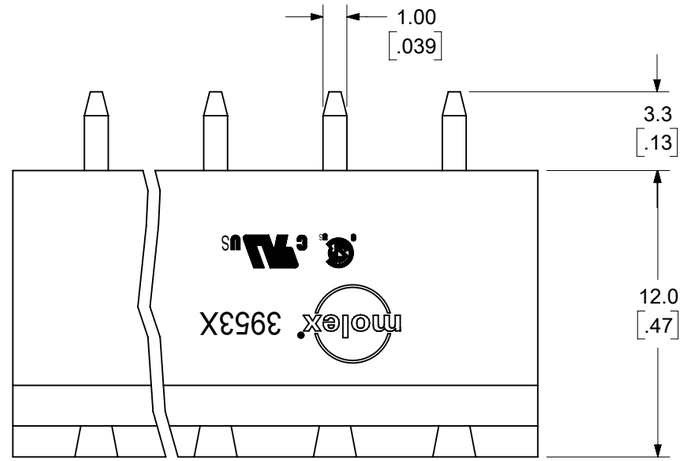

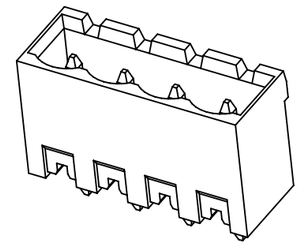

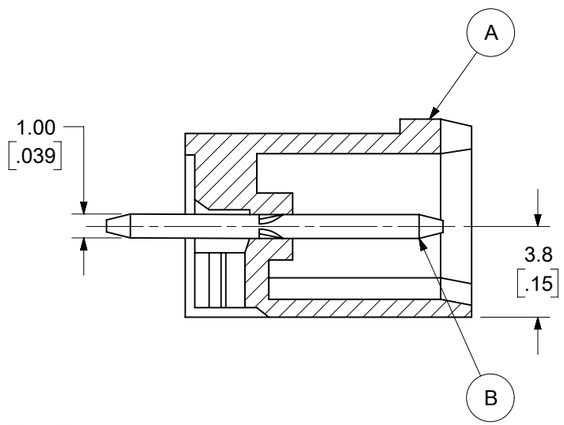

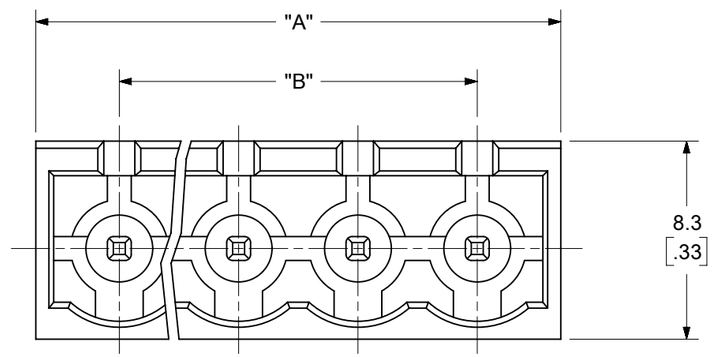

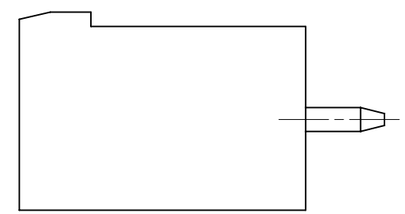

SPECIFICATIONS:

1. MATERIAL:
   (A). BODY: PA66 (UL94-V0)
   (B). PIN MATERIAL: BRASS
   PIN FINISH:
   TIN - 3 µm (118 µin) MIN MATTE TIN
   OVER 2 µm (79 µin) MIN NICKEL
   GOLD - 0.76 µm (30 µin) MIN GOLD IN
   CONTACT AREA, 3 µm (118 µIN) MIN
   MATTE TIN IN SOLDER AREA.
   2 µm (79 µin) MIN NICKEL UNDERPLATE
2. ELECTRICAL RATING: 300V, 18A (PER UL)
3. OPERATING TEMPERATURE: -40°C to +115°C.
4. INSULATION RESISTANCE: DC 500V, 500MΩ.
5. DIELECTRIC WITHSTAND: AC 2500V FOR 1 MINUTE.
6. BREAKDOWN VOLTAGE : 4000V.

TOLERANCES			
MM	TOL	INCH	TOL
0-6	±0.25	0-.24	±.010
>6-30	±0.40	.24-1.18	±.016
>30-120	±0.50	1.18-4.76	±.020
>120	±0.80	>4.76	±.031

THIS DRAWING CONTAINS INFORMATION THAT IS PROPRIETARY TO MOLEX ELECTRONIC TECHNOLOGIES, LLC AND SHOULD NOT BE USED WITHOUT WRITTEN PERMISSION

FUNCTIONAL SYMBOLS: E/A = 0; E/C = 0; E/P = 0

DIVISIONAL SYMBOLS

DIMENSION UNITS: MM/INCH
SCALE: 4:1

GENERAL TOLERANCES (UNLESS SPECIFIED)

	MM	INCH
4 PLACES	± ---	± ---
3 PLACES	± ---	± SEE CHART
2 PLACES	± SEE CHART	± SEE CHART
1 PLACE	± SEE CHART	± ---
0 PLACES	± ---	± ---
ANGULAR TOL	± ---	

DRAFT WHERE APPLICABLE MUST REMAIN WITHIN DIMENSIONS

CURRENT REV DESC: MODIFIED SPECIFICATIONS

EC NO: 735568
DRWN: ABENJAMINLW 2023/01/06
CHK'D: DACHAMMER 2023/01/17
APPR: JFMURPHY 2023/01/27

INITIAL REVISION:
DRWN: LROTHAUS 2006/01/09
APPR: JPAWLICK 2006/01/10

THIRD ANGLE PROJECTION | DRAWING: B-SIZE | SERIES: 39531

molex

5.08MM, EURO HEADER, VERTICAL

PRODUCT CUSTOMER DRAWING

DOCUMENT NUMBER	DOC TYPE	DOC PART	REVISION
SD-39531-002	PSD	001	A3

MATERIAL NUMBER	CUSTOMER	SHEET NUMBER
SEE SHEET-2	GENERAL MARKET	1 OF 2

DOCUMENT STATUS	P1	RELEASE DATE	2023/01/27 16:26:29

FORMAT: Eng-lega-master-tb-prod-B
REVISION: E1
DATE: 2021/05/01

DESCRIPTION	CIRCUIT SIZE	MATERIAL NUMBERS												DIMENSIONAL INFORMATION			
		BLACK						GREEN									
		100% TIN			30 u" GOLD			100% TIN			30 u" GOLD						
		PRINTING OPTIONS			PRINTING OPTIONS			PRINTING OPTIONS			PRINTING OPTIONS			DIM. "A"		DIM. "B"	
		None	10AV	11AV	None	10AV	11AV	None	10AV	11AV	None	10AV	11AV	mm	inch	mm	inch
5.08 MM, EURO HEADER, VERTICAL	2	395311002	395311302	395311402	395311502	395311802	395311902	395316002	395316302	395316402	395316502	395316802	395316902	12.16	.479	5.08	.200
5.08 MM, EURO HEADER, VERTICAL	3	395311003	395311303	395311403	395311503	395311803	395311903	395316003	395316303	395316403	395316503	395316803	395316903	17.24	.679	10.16	.400
5.08 MM, EURO HEADER, VERTICAL	4	395311004	395311304	395311404	395311504	395311804	395311904	395316004	395316304	395316404	395316504	395316804	395316904	22.32	.879	15.24	.600
5.08 MM, EURO HEADER, VERTICAL	5	395311005	395311305	395311405	395311505	395311805	395311905	395316005	395316305	395316405	395316505	395316805	395316905	27.40	1.079	20.32	.800
5.08 MM, EURO HEADER, VERTICAL	6	395311006	395311306	395311406	395311506	395311806	395311906	395316006	395316306	395316406	395316506	395316806	395316906	32.48	1.279	25.40	1.000
5.08 MM, EURO HEADER, VERTICAL	7	395311007	395311307	395311407	395311507	395311807	395311907	395316007	395316307	395316407	395316507	395316807	395316907	37.56	1.479	30.48	1.200
5.08 MM, EURO HEADER, VERTICAL	8	395311008	395311308	395311408	395311508	395311808	395311908	395316008	395316308	395316408	395316508	395316808	395316908	42.64	1.679	35.56	1.400
5.08 MM, EURO HEADER, VERTICAL	9	395311009	395311309	395311409	395311509	395311809	395311909	395316009	395316309	395316409	395316509	395316809	395316909	47.72	1.879	40.64	1.600
5.08 MM, EURO HEADER, VERTICAL	10	395311010	395311310	395311410	395311510	395311810	395311910	395316010	395316310	395316410	395316510	395316810	395316910	52.80	2.079	45.72	1.800
5.08 MM, EURO HEADER, VERTICAL	11	395311011	395311311	395311411	395311511	395311811	395311911	395316011	395316311	395316411	395316511	395316811	395316911	57.88	2.279	50.80	2.000
5.08 MM, EURO HEADER, VERTICAL	12	395311012	395311312	395311412	395311512	395311812	395311912	395316012	395316312	395316412	395316512	395316812	395316912	62.96	2.479	55.88	2.200
5.08 MM, EURO HEADER, VERTICAL	13	395311013	395311313	395311413	395311513	395311813	395311913	395316013	395316313	395316413	395316513	395316813	395316913	68.04	2.679	60.96	2.400
5.08 MM, EURO HEADER, VERTICAL	14	395311014	395311314	395311414	395311514	395311814	395311914	395316014	395316314	395316414	395316514	395316814	395316914	73.12	2.879	66.04	2.600
5.08 MM, EURO HEADER, VERTICAL	15	395311015	395311315	395311415	395311515	395311815	395311915	395316015	395316315	395316415	395316515	395316815	395316915	78.20	3.079	71.12	2.800
5.08 MM, EURO HEADER, VERTICAL	16	395311016	395311316	395311416	395311516	395311816	395311916	395316016	395316316	395316416	395316516	395316816	395316916	83.28	3.279	76.20	3.000
5.08 MM, EURO HEADER, VERTICAL	17	395311017	395311317	395311417	395311517	395311817	395311917	395316017	395316317	395316417	395316517	395316817	395316917	88.36	3.479	81.28	3.200
5.08 MM, EURO HEADER, VERTICAL	18	395311018	395311318	395311418	395311518	395311818	395311918	395316018	395316318	395316418	395316518	395316818	395316918	93.44	3.679	86.36	3.400
5.08 MM, EURO HEADER, VERTICAL	19	395311019	395311319	395311419	395311519	395311819	395311919	395316019	395316319	395316419	395316519	395316819	395316919	98.52	3.879	91.44	3.600
5.08 MM, EURO HEADER, VERTICAL	20	395311020	395311320	395311420	395311520	395311820	395311920	395316020	395316320	395316420	395316520	395316820	395316920	103.60	4.079	96.52	3.800
5.08 MM, EURO HEADER, VERTICAL	21	395311021	395311321	395311421	395311521	395311821	395311921	395316021	395316321	395316421	395316521	395316821	395316921	108.68	4.279	101.60	4.000
5.08 MM, EURO HEADER, VERTICAL	22	395311022	395311322	395311422	395311522	395311822	395311922	395316022	395316322	395316422	395316522	395316822	395316922	113.76	4.479	106.68	4.200
5.08 MM, EURO HEADER, VERTICAL	23	395311023	395311323	395311423	395311523	395311823	395311923	395316023	395316323	395316423	395316523	395316823	395316923	118.84	4.679	111.76	4.400
5.08 MM, EURO HEADER, VERTICAL	24	395311024	395311324	395311424	395311524	395311824	395311924	395316024	395316324	395316424	395316524	395316824	395316924	123.92	4.879	116.84	4.600

TOLERANCES			
MM	TOL	INCH	TOL
0-6	±0.25	0-.24	±.010
>6-30	±0.40	.24-1.18	±.016
>30-120	±0.50	1.18-4.76	±.020
>120	±0.80	>4.76	±.031

FUNCTIONAL SYMBOLS: E/A = 0; E/C = 0; E/P = 0

DIVISIONAL SYMBOLS

THIS DRAWING CONTAINS INFORMATION THAT IS PROPRIETARY TO MOLEX ELECTRONIC TECHNOLOGIES, LLC AND SHOULD NOT BE USED WITHOUT WRITTEN PERMISSION

DIMENSION UNITS: MM/INCH
SCALE: 4:1

GENERAL TOLERANCES (UNLESS SPECIFIED)

	MM	INCH
4 PLACES	± ---	± ---
3 PLACES	± ---	± SEE CHART
2 PLACES	± SEE CHART	± SEE CHART
1 PLACE	± SEE CHART	± ---
0 PLACES	± ---	± ---
ANGULAR TOL	± ---	

DRAFT WHERE APPLICABLE MUST REMAIN WITHIN DIMENSIONS

CURRENT REV DESC: MODIFIED SPECIFICATIONS

EC NO: 735568
DRWN: ABENJAMINLW 2023/01/06
CHK'D: DACHAMMER 2023/01/17
APPR: JFMURPHY 2023/01/27

INITIAL REVISION:
DRWN: LROTHAUS 2006/01/09
APPR: JPAWLICK 2006/01/10

THIRD ANGLE PROJECTION | DRAWING: B-SIZE | SERIES: 39531

molex

5.08MM, EURO HEADER, VERTICAL

PRODUCT CUSTOMER DRAWING

DOCUMENT NUMBER	DOC TYPE	DOC PART	REVISION
SD-39531-002	PSD	001	A3

MATERIAL NUMBER	CUSTOMER	SHEET NUMBER
SEE CHART	GENERAL MARKET	2 OF 2

DOCUMENT STATUS	P1	RELEASE DATE	2023/01/27 16:26:29

FORMAT: Eng-lega-master-tb-prod-B
REVISION: E1
DATE: 2021/05/01