THIS DRAWING IS UNPUBLISHED. RELEASED FOR PUBLICATION - ,- .
© COPYRIGHT - By - ALL RIGHTS RESERVED.

| LOC | DIST |
|---|---|
| GP | 00 |

REVISIONS

| P | LTR | DESCRIPTION | DATE | DWN | APVD |
|---|---|---|---|---|---|
| | H1 | REVISED PER ECO-11-005033 | 23MAR11 | RK | HMR |

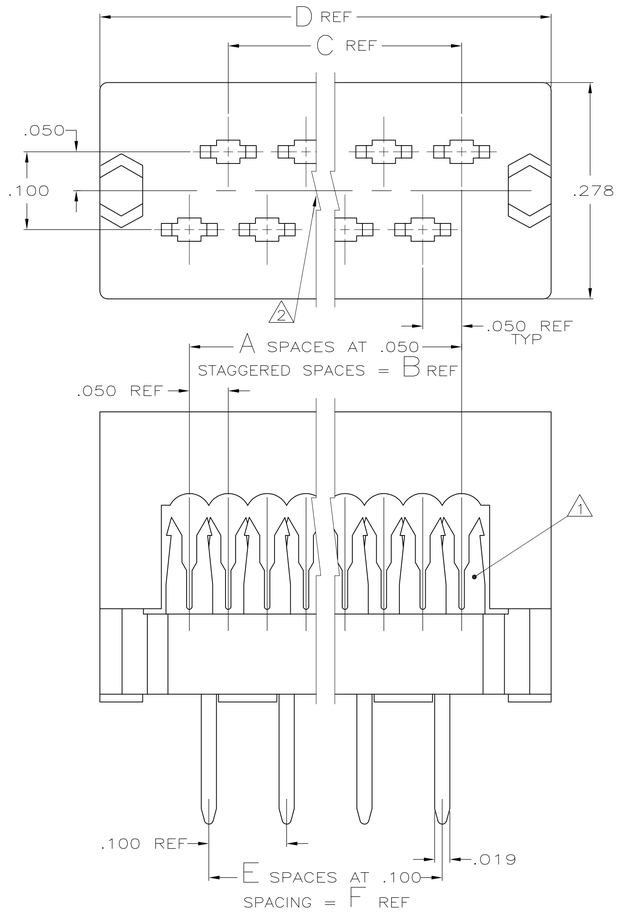


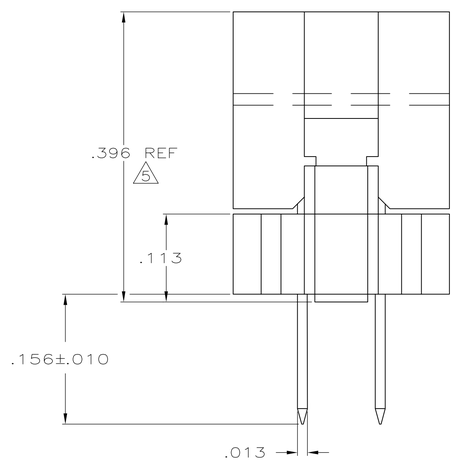


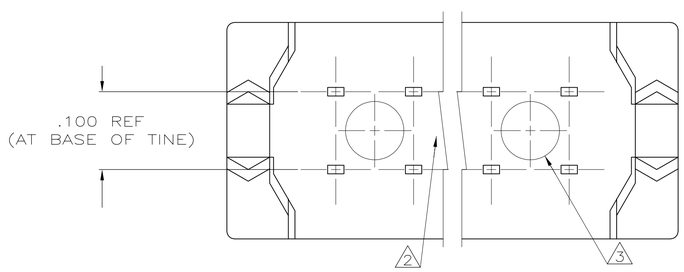


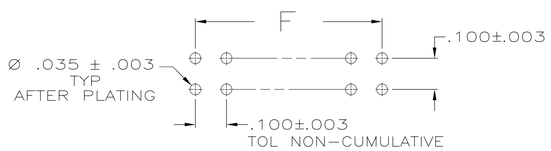


RECOMMENDED HOLE LAYOUT

1. CONTACTS DESIGNED FOR 26 & 28 AWG STRANDED OR 26, 28, & 30 AWG SOLID WIRE.
2. AMP TRADEMARK LOCATED IN APPROX AREA SHOWN.
3. STANDOFFS: POS 10 (2) STANDOFFS AS SHOWN.
   14-16 (3) STANDOFFS, (1) CENTERED BETWEEN (2) SHOWN
   20-26 (4) (2)
   30 (5) (3)
   34 (6) (4)
   40-44 (7) (5)
   50 (8) (6)
   60 (9) (7)
   64 (10) (8)
4. .000100-.000200 BRIGHT TIN LEAD, ALL OVER .000050 NICKEL.
5. HEIGHT AFTER TERMINATION IS .253 REF.
6. .000005 MIN GOLD ON RIBBON CABLE TERMINATION AREA .000100-.000200 MIN MATTE TIN ON SOLDER TAILS, ALL OVER .000050 MIN NICKEL.
7. MOLDED PARTS, 94V-0 RATED THERMOPLASTIC, COLOR: BLACK. CONTACTS: PHOS BRONZE.

| | CONTACT FINISH F | E | D | C | B | A | NO OF POSN | PART NO |
|---|---|---|---|---|---|---|---|---|
| | 6 | 2.100 | 21 | 2.380 | 2.100 | 2.150 | 43 | 44 | 2-746610-6 |
| | 6 | 3.100 | 31 | 3.380 | 3.100 | 3.150 | 63 | 64 | 2- -5 |
| | 6 | 2.900 | 29 | 3.180 | 2.900 | 2.950 | 59 | 60 | 2- -4 |
| | 6 | 1.100 | 11 | 1.380 | 1.100 | 1.150 | 23 | 24 | 2- -3 |
| | 6 | .600 | 6 | .880 | .600 | .650 | 13 | 14 | 2- -2 |
| | 6 | .400 | 4 | .680 | .400 | .450 | 9 | 10 | 2- -1 |
| | 6 | 2.400 | 24 | 2.680 | 2.400 | 2.450 | 49 | 50 | 2- -0 |
| | 6 | 1.900 | 19 | 2.180 | 1.900 | 1.950 | 39 | 40 | 1- -9 |
| | 6 | 1.600 | 16 | 1.880 | 1.600 | 1.650 | 33 | 34 | 1- -8 |
| | 6 | 1.400 | 14 | 1.680 | 1.400 | 1.450 | 29 | 30 | 1- -7 |
| | 6 | 1.200 | 12 | 1.480 | 1.200 | 1.250 | 25 | 26 | 1- -6 |
| | 6 | .900 | 9 | 1.180 | .900 | .950 | 19 | 20 | 1- -5 |
| | 6 | .700 | 7 | .980 | .700 | .750 | 15 | 16 | 1- -4 |
| OBSOLETE | 4 | 2.100 | 21 | 2.380 | 2.100 | 2.150 | 43 | 44 | 1- -3 |
| OBSOLETE | 4 | 3.100 | 31 | 3.380 | 3.100 | 3.150 | 63 | 64 | 1- -2 |
| OBSOLETE | 4 | 2.900 | 29 | 3.180 | 2.900 | 2.950 | 59 | 60 | 1- -1 |
| OBSOLETE | 4 | 2.400 | 24 | 2.680 | 2.400 | 2.450 | 49 | 50 | 1- -0 |
| | 4 | 1.900 | 19 | 2.180 | 1.900 | 1.950 | 39 | 40 | | -9 |
| | 4 | 1.600 | 16 | 1.880 | 1.600 | 1.650 | 33 | 34 | | -8 |
| OBSOLETE | 4 | 1.400 | 14 | 1.680 | 1.400 | 1.450 | 29 | 30 | | -7 |
| | 4 | 1.200 | 12 | 1.480 | 1.200 | 1.250 | 25 | 26 | | -6 |
| OBSOLETE | 4 | 1.100 | 11 | 1.380 | 1.100 | 1.150 | 23 | 24 | | -5 |
| | 4 | .900 | 9 | 1.180 | .900 | .950 | 19 | 20 | | -4 |
| | 4 | .700 | 7 | .980 | .700 | .750 | 15 | 16 | | -3 |
| | 4 | .600 | 6 | .880 | .600 | .650 | 13 | 14 | | -2 |
| | 4 | .400 | 4 | .680 | .400 | .450 | 9 | 10 | 746610 -1 |

THIS DRAWING IS A CONTROLLED DOCUMENT.

DIMENSIONS: INCHES

TOLERANCES UNLESS OTHERWISE SPECIFIED:
0 PLC ± -
1 PLC ± -
2 PLC ± -
3 PLC ± .005
4 PLC ± -
ANGLES ± -

MATERIAL 7

FINISH CONTACTS: SEE TABLE

DWN L. VARELA - DOCK5 11-29-86
CHK C. ROHDE 11-29-04
APVD M. WALMSLEY 11-29-04

PRODUCT SPEC 108-40013
APPLICATION SPEC 114-40005
WEIGHT -

TE Connectivity

NAME KIT, AMP-LATCH DIP PLUG, PREASSEMBLED, .100 X .100 CENTERS,

| SIZE | CAGE CODE | DRAWING NO | RESTRICTED TO |
|---|---|---|---|
| A1 | 00779 | C-746610 | - |

CUSTOMER DRAWING SCALE NTS SHEET 1 OF 1 REV H1