CODE 15 - TINEL-LOCK BACKSHELL

TXR15AB00-1608AI-

- SERIES
  - TXR: RING INCLUDED (SEE RING OPTION)
  - TX: RING NOT INCLUDED
- CONNECTOR INTERFACE
- MATERIAL
  - REFER TO CH00-0250-008
- FINISH
  - REFER TO CH00-0250-008
- ANGLE
- DASH NUMBER (TABLE 1)
- ENTRY SIZE (TABLE 2)
- RING OPTION
  - AI - TO SUIT SINGLE BRAID
  - BI - TO SUIT DOUBLE BRAID
  - FOR TX, LEAVE BLANK
- MODIFICATION CODE
  - REFER TO CH00-0250-008 2

NOTES:

1. THIS PRODUCT IS DESIGNED TO TERMINATE A BRAIDED CABLE SHIELD AND A HEAT SHRINKABLE LIPPED BOOT TO A CONNECTOR.

2. FOR ADDITIONAL DIMENSIONS, ORDERING INFORMATION AND MODIFICATIONS, SEE CH00-0250-008.

3. SEE DRAWING TR FOR DETAIL ON TINEL-LOCK RING, RINGS ARE DESIGNED TO BE HEATED ELECTRICALLY, ALL RINGS ARE MARKED WITH THERMOCHROMIC PAINT WHICH CHANGES COLOUR WHEN INSTALLATION TEMPERATURE IS REACHED.

4. BACKSHELL TO BE PERMANENTLY MARKED/BAGGED AND LABELLED WITH CODE IDENTIFICATION NUMBER AND PART NUMBER LESS RING DESIGNATOR. (e.g. 06090-TXR15AB00-1206). RING SHALL BEAR NO MARKING.

5. IF MAX ENTRY IS EXCEEDED, A 2 PIECE BACKSHELL ASSEMBLY (TYPE 2) IS SUPPLIED.

6. BACKSHELL MATES TO MIL-C-5015, SOLDER CONTACT, MS3100, MS3101, MS3106, MS3107 AND MS3108 WITH ENDBELL.

7. ANTI-ROTATIONAL SET SCREW, THREE THREADED HOLES 120° ± 5° APART, SINGLE MATING SET SCREW SUPPLIED.

If this document is printed it becomes uncontrolled. Check for the latest revision

DRAWN	K.WINCZURA	DATE 04/12/2014	3RD ANGLE PROJECTION NOT TO SCALE
CHECKED		04/12/2014	
APPROVED	K.SHEPPARD	11/12/2014	UNLESS OTHERWISE SPECIFIED ALL DIMENSIONS IN MILLIMETRES GENERAL TOL LINEAR +/-0,25MM ANGULAR +/- 1°
APPROVED	H.SMITH	07/07/2015	

REVISIONS

LTR	DESCRIPTION	DATE	APPROVED
D	REVISED PER ECO-15-002398	17/02/2015	H.SMITH
E	REVISED PER ECO-15-009981	07/07/2015	H.SMITH

TE CAGE CODE: 06090
POLAMCO/TE CAGE CODE: U5792

TITLE: TINEL-LOCK BACKSHELL

ASSY USED ON: MIL-C-5015 MS "V" THREAD END BELLS

Polamco TE connectivity

TE CONNECTIVITY - POLAMCO LTD RESERVES THE RIGHT TO AMEND THIS DRAWING AND THE INFORMATION SET FORTH HEREON AT ANY TIME. USERS SHOULD INDEPENDENTLY EVALUATE THE SUITABILITY OF THE PRODUCT FOR THEIR APPLICATION.

DRAWING NO:	DRAWING REV:	SHT
TXR15	E	1

If this document is printed it becomes uncontrolled. Check for the latest revision

IF MAX ENTRY IS EXCEEDED BACKSHELL WILL BE SUPPLIED AS TYPE 2

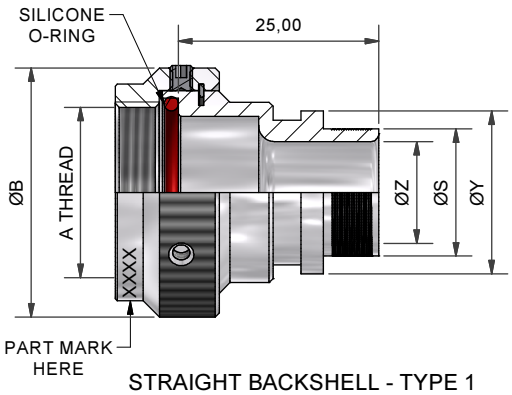

STRAIGHT BACKSHELL - TYPE 1

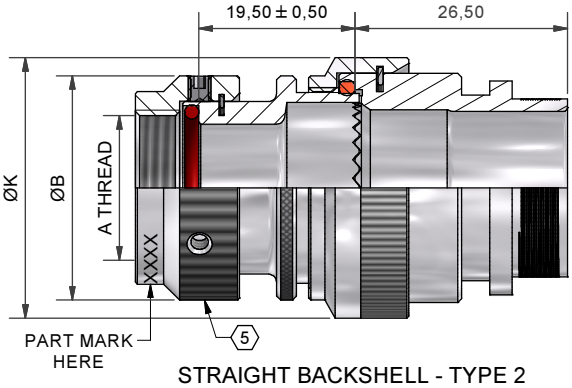

STRAIGHT BACKSHELL - TYPE 2

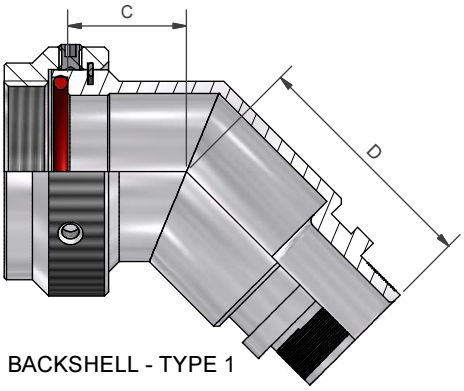

45° BACKSHELL - TYPE 1

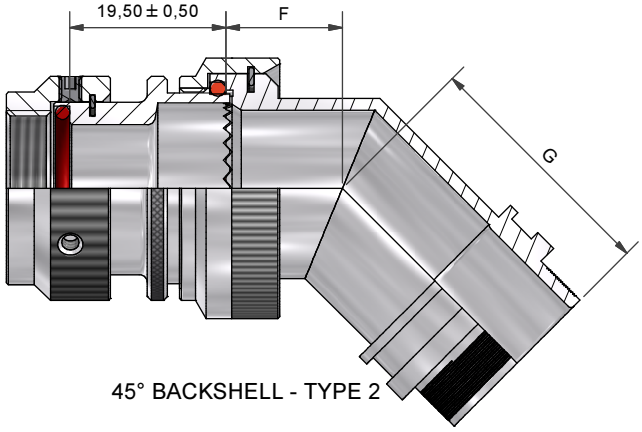

45° BACKSHELL - TYPE 2

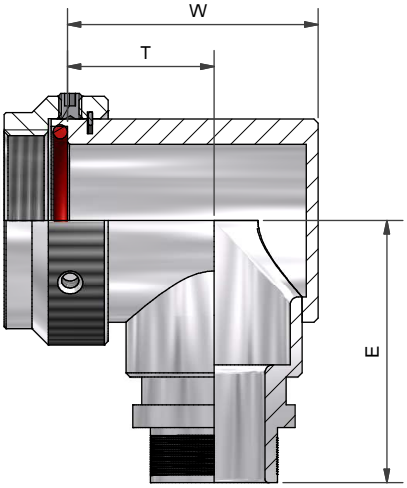

90° BACKSHELL - TYPE 1

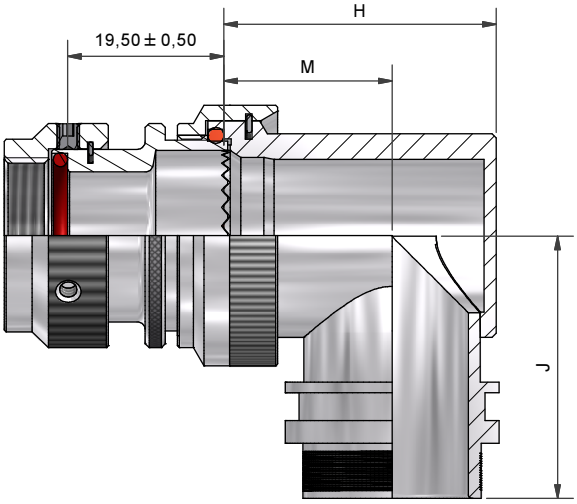

90° BACKSHELL - TYPE 2

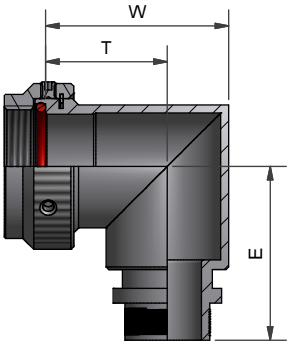

90° BACKSHELL - TYPE 1
STAINLESS STEEL AND
NICKEL ALUMINIUM BRONZE

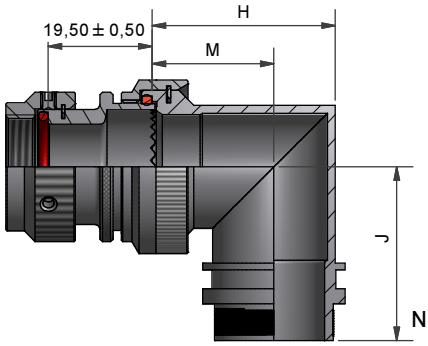

90° BACKSHELL - TYPE 2
STAINLESS STEEL AND
NICKEL ALUMINIUM BRONZE

DRAWN	K.WINCZURA	DATE 04/12/2014	3RD ANGLE PROJECTION NOT TO SCALE
CHECKED		04/12/2014	
APPROVED	K.SHEPPARD	11/12/2014	UNLESS OTHERWISE SPECIFIED ALL DIMENSIONS IN MILLIMETRES GENERAL TOL LINEAR +/-0,25MM ANGULAR +/- 1°
APPROVED	H.SMITH	07/07/2015	

REVISIONS

LTR	DESCRIPTION	DATE	APPROVED
D	REVISED PER ECO-15-002398	17/02/2015	H.SMITH
E	REVISED PER ECO-15-009981	07/07/2015	H.SMITH

TE CAGE CODE: 06090
POLAMCO/TE CAGE CODE: U5792

TITLE:

TINEL-LOCK BACKSHELL

ASSY USED ON:

MIL-C-5015 MS "V" THREAD END BELLS

Polamco
TE connectivity

TE CONNECTIVITY - POLAMCO LTD RESERVES THE RIGHT TO AMEND THIS DRAWING AND THE INFORMATION SET FORTH HEREON AT ANY TIME. USERS SHOULD INDEPENDENTLY EVALUATE THE SUITABILITY OF THE PRODUCT FOR THEIR APPLICATION.

DRAWING NO:	DRAWING REV:	SHT
TXR15	E	2

TABLE 1

ORDER NUMBER	SHELL SIZE	A THREAD	ØB MAX	MAX ENTRY	C ±0,5	D ±0,5	W ±0,5	T ±0,5	E ±0,5	THESE DIMENSIONS APPLY IF BACKSHELL IS STAINLESS STEEL OR NICKEL ALUMINIUM BRONZE W ±0,5	T ±0,5	E ±0,5
03	8S & 10S	1/2-28UNEF	21,5	05	12,6	27,5	21,7	13,0	28,0	22,2	13,0	28,2
04	10SL,12 & 12S	5/8-24UNEF	25,0	07	14,0	28,0	24,9	14,4	29,5	25,4	14,4	29,7
06	14 & 14S	3/4-20UNEF	28,0	08	15,0	29,0	27,9	15,9	31,0	28,4	15,9	31,2
08	16 & 16S	7/8-20UNEF	31,1	10	15,6	29,7	31,3	18,3	32,7	31,8	18,3	32,9
10	18	1-20UNEF	35,0	12	16,3	30,5	34,3	19,3	34,3	34,8	19,3	34,3
12	20 & 22	1 3/16-18UNEF	39,0	16	17,2	30,9	40,4	22,9	35,8	40,9	22,9	36,1
16	24 & 28	1 7/16-18UNEF	45,2	20	17,9	32,1	44,0	24,0	38,9	44,5	24,0	39,1
20	32	1 3/4-18UNS	54,9	24	24,3	32,1	50,3	27,3	42,8	50,8	27,3	42,8
24	36	2-18UNS	62,0	24	26,9	29,3	57,8	31,1	46,8	58,3	31,1	46,8
28	40	2 1/4-16UN	68,6	24	31,8	30,7	64,4	34,5	51,0	64,9	34,5	51,0

TABLE 2

ENTRY SIZE	ØZ MIN	ØS	ØY ±0,3	ØK MAX	F ±0,5	G ±0,5	H ±0,5	M ±0,5	J ±0,5	THESE DIMENSIONS APPLY IF BACKSHELL IS STAINLESS STEEL OR NICKEL ALUMINIUM BRONZE H ±0,5	M ±0,5	J ±0,5
04	6,35	9,49 +/-0,04	14,00	NA	NA	NA	NA	NA	NA	NA	NA	NA
05	7,92	11,06 +/-0,04	15,50	NA	NA	NA	NA	NA	NA	NA	NA	NA
06	9,53	12,66 +/-0,04	17,10	21,0	12,5	27,5	24,0	15,5	27,95	24,3	17,2	28,2
07	11,10	14,21 +/-0,07	18,70	21,0	12,5	27,5	24,0	15,5	27,95	24,3	17,2	28,2
08	12,70	15,81 +/-0,07	20,30	24,5	13,1	28,0	27,0	17,0	29,45	28,3	19,4	29,7
10	15,88	18,96 +/-0,08	23,50	29,0	13,5	29,0	31,0	19,5	31,00	31,1	21,0	31,2
12	19,05	22,14 +/-0,08	26,70	32,5	14,5	29,7	34,0	21,0	32,70	34,2	22,8	32,9
14	22,23	25,30 +/-0,08	29,80	35,5	15,5	30,5	35,0	20,0	34,25	38,5	25,3	34,5
16	25,40	28,48 +/-0,08	33,00	37,0	16,1	30,9	38,0	21,5	35,80	40,7	26,1	36,1
18	28,58	31,65 +/-0,08	36,20	40,0	16,5	31,1	42,0	24,0	37,40	43,7	27,6	37,6
20	31,75	34,83 +/-0,08	39,40	43,5	17,0	32,1	45,0	25,5	38,90	46,4	29,1	39,1
22	34,93	37,98 +/-0,08	42,50	48,5	18,5	35,3	54,5	31,0	42,00	50,0	31,0	42,0
24	38,10	41,15 +/-0,08	45,70	52,1	21,9	38,1	58,0	33,0	46,00	53,5	33,0	46,0

If this document is printed it becomes uncontrolled. Check for the latest revision

DRAWN	K.WINCZURA	DATE 04/12/2014	3RD ANGLE PROJECTION NOT TO SCALE
CHECKED		04/12/2014	
APPROVED	K.SHEPPARD	11/12/2014	UNLESS OTHERWISE SPECIFIED ALL DIMENSIONS IN MILLIMETRES GENERAL TOL LINEAR +/-0,25MM ANGULAR +/- 1°
APPROVED	H.SMITH	07/07/2015	

REVISIONS

LTR	DESCRIPTION	DATE	APPROVED
D	REVISED PER ECO-15-002398	17/02/2015	H.SMITH
E	REVISED PER ECO-15-009981	07/07/2015	H.SMITH

TE CAGE CODE: 06090
POLAMCO/TE CAGE CODE: U5792

TITLE:

TINEL-LOCK BACKSHELL

ASSY USED ON:

MIL-C-5015 MS "V" THREAD END BELLS

Polamco

TE connectivity

TE CONNECTIVITY - POLAMCO LTD RESERVES THE RIGHT TO AMEND THIS DRAWING AND THE INFORMATION SET FORTH HEREON AT ANY TIME. USERS SHOULD INDEPENDENTLY EVALUATE THE SUITABILITY OF THE PRODUCT FOR THEIR APPLICATION.

DRAWING NO:	DRAWING REV:	SHT
TXR15	E	3