THIS COPY IS PROVIDED ON A RESTRICTED BASIS AND IS NOT TO BE USED IN ANY WAY DETRIMENTAL TO THE INTERESTS OF PANDUIT CORP.

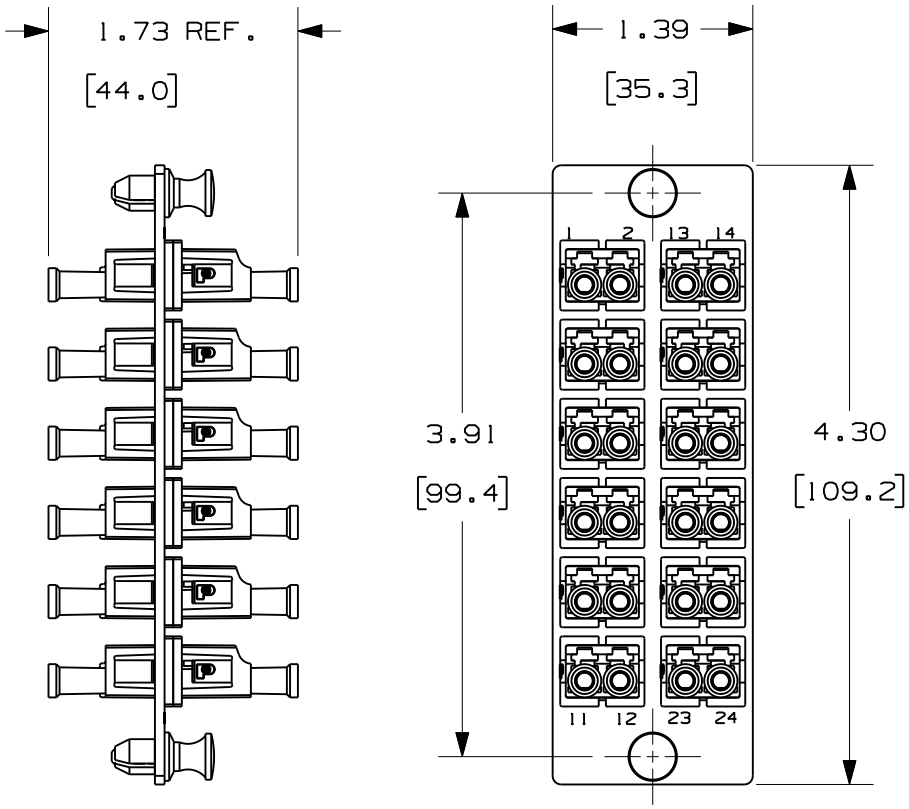

PANDUIT P/N	ADAPTER COLOT	SPLIT SLEEVE TYPE
FAP12WEIDLC	ELECTRIC IVORY	PHOS BRONZE
FAP12WAQDLC	AQUA	
FAP12WBLDLC	BLACK	
FAP12WBUDLCZ	BLUE	ZIRCONIA
FAP12WAQDLCZ	AQUA	

NOTES:
1. SEE CURRENT CATALOG FOR PART NUMBER SUFFIXES TO INDICATE COLOR AND/OR PACKAGE QUANTITIES.
2. SEE CATALOG FOR COMPLETE LIST OF PARTS APPLICABLE FOR USE WITH THIS PRODUCT.
3. MATERIALS:
   a. PLATE: C.R.S. POWDER COATED
   b. ADAPTER: COMPOSITE, ELECTRIC IVORY, BLUE OR AQUA.
   c. SPLIT SLEEVE: SEE TABLE.
4. DIMENSIONS IN BRACKETS ARE METRIC.

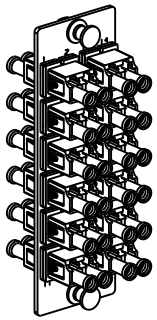

REV	DATE	BY	CHK	DESCRIPTION	ECN - R	CUST	SUP	OTH
03	01-31-11	EFK		RELEASED TO PRODUCTION	01945-14			

12 POSITION
DUPLEX LC FIBER ADAPTER PANEL
CUSTOMER DRAWING

PANDUIT™ CORP.
TINLEY PARK, ILL 60477

THIRD ANGLE PROJECTION

ALL DIMENSIONS ARE GIVEN IN INCHES, UNLESS OTHERWISE SPECIFIED.
DIMENSIONAL TOLERANCES ARE:
(.X) (.XXX)±.010 [0.3]
(.XX)±.03 [0.8] ANGLES

DRAWN BY: MYW
DATE: 04-21-05
CHK'D: TMS
REVIEW DRAWING NUMBERS: SEE NOTES
DRAWING FILENAME: M01945AE_DC/01A
SCALE: NONE
PART NO.: SEE TABLE
DRAWING NO.: 01945-14
SIZE: A