- 2.0 mm Low Profile
- SMD Version
- Multi Volt (1.5 to 6V)
- RoHS Compliant

ECS-327SMO

SMD CLOCK OSCILLATOR

The ECS-327SMO oscillators utilizes the 32.768 KHz tuning fork crystal in a SMD ceramic package. It is designed specifically for wireless PCMCIA and portable communication equipment applications.

OPERATING CONDITIONS / ELECTRICAL CHARACTERISTICS

PARAMETERS	CONDITIONS	ECS-327SMO			UNITS
		MIN	TYP	MAX	
Output Frequency			32.768		KHz
Frequency Stability	-10 ~ +60°C	-60		+30	ppm
	-40 ~ +85°C	-140		+30	ppm
Operating Temperature		-40		-85	°C
Storage Temperature		-50		+125	°C
Input Voltage Vcc		+1.5	+3.3	+6.0	V DC
Input Current	with 15 pF load		8	15	µA
Symmetry	at ½ Vcc level and +25°C	45/55		55/45	%
Rise and Fall Time				200	ns
"0" Level				Vcc x 0.1	
"1" Level		Vcc x 0.9			
Load	CMOS			15	pF
Disable delay Time				150	nS
Startup Time	VDD +3.3V at +25°c		220	500	mS

* Inclusive of 25° C tolerance, operating temperature range, input voltage change, load change aging, shock and vibration

PACKAGE DIMENSIONS (mm)

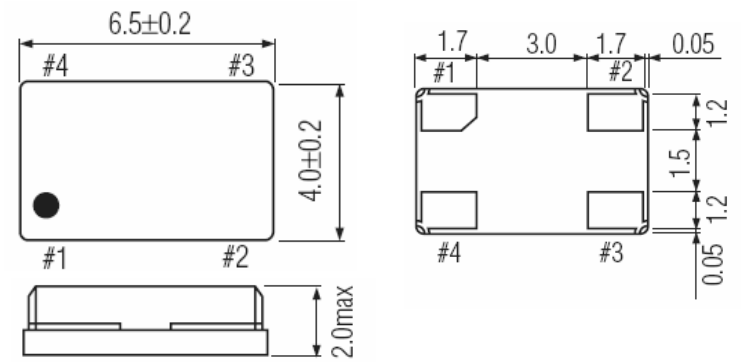

Figure 1) Top, Side and Bottom Views

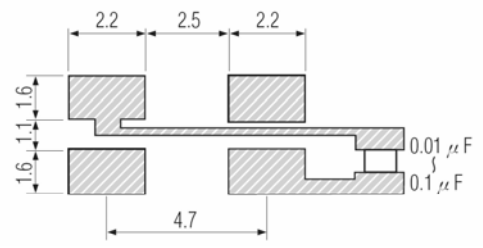

Figure 2) Land Pattern

PAD CONNECTIONS		
#1	"L"	Open or "H"
#2	Gnd	
#3	Z	Output
#4	Vcc	

Z = High Impedance

PACKAGE DATA	
COVER	METAL
BASE	CERAMIC
TERMINAL PLATING	GOLD

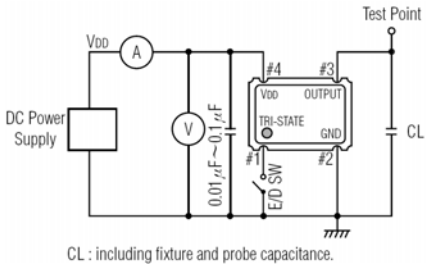

Figure 3) Test Circuit

PART NUMBER: ECS-327SMO-TR

1105 South Ridgeview Road • Olathe, KS 66062 • Phone: 913.782.7787 • Fax: 913.782.6991 • www.ecsxtal.com