Century Style Analog Panel Meters

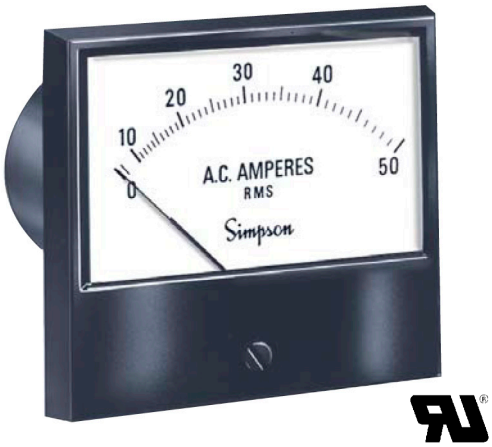

- **UL Recognized – File # E91015**
  Except for the Wattmeters and Frequency Meters
- **Glass window for optimum viewing**
- **Rugged black plastic case**
- **Black knife-edge pointer for precision reading**

The Specifications & Dimensions are on the last pages

Ordering Information

AC Milliammeters, Iron-Vane Movement				
Range	Appprox. Impedance (Ohms) @ 60 Hz	Model / Size and Catalog Number		
		2-1/2" Model 2152	3-1/2" Model 2153	4-1/2" Model 2154
0-10	1,650	17680	<>	17760
0-50	80	17681	17716	17761
0-100	17.2	17682	17717	17762
0-250	3.15	17683	17718	17763
0-500	0.9	17684	17719	17764

Century Style Analog Panel Meters

Ordering Information

AC Ammeters, Iron-Vane Movement				
Range	Appprox. Impedance (Ohms) @ 60 Hz	Model / Size and Catalog Number		
		2-1/2" Model 2152	3-1/2" Model 2153	4-1/2" Model 2154
0-1	.213	17665	17695	17740
0-1.5	.105	17666	<>	<>
0-2	.065	<>	17697	17742
0-3	.028	17667	17698	17743
0-5	.008	17668	17699	17744
0-10	.004	17669	17700	17745
0-10	.008	<>	35081 †	35085 †
0-15	.0025	17670	17701	17746
0-25	.002	17671	17702	17747
0-25	.008	<>	35082 †	35086 †
0-30	.0015	17672	17703	17748
0-50	.001	17673	17704	17749
0-50	.008	<>	35083 †	35087 †
0-75	.0002	<>	17710	17755
0-75	.008	<>	35084 †	35088 †
0-80	.008	<>	35036 †	<>
0-100	.008	17674 †	17706 †	17751 †
0-150	.008	<>	17707 †	17752 †
0-200	.008	<>	17708 †	17753 †
0-300	.008	<>	17709 †	17754 †

† These meters are 5-amp meters to be used with an external current transformer

<> Available on special order

AC Dual Range Ammeter / Voltmeter, Iron-Vane Movement				
Range	Appprox. Impedance (Ohms) @ 60 Hz	Model / Size and Catalog Number		
		2-1/2" Model 2152	3-1/2" Model 2153	4-1/2" Model 2154
0-150V 0-5A	15,030 0.021	-	17694	17739

Ordering Information

AC Voltmeters, Iron-Vane Movement				
Range	Appprox. Impedance (Ohms) @ 60 Hz	Model / Size and Catalog Number		
		2-1/2" Model 2152	3-1/2" Model 2153	4-1/2" Model 2154
0-5	33	<>	17725	<>
0-10	133	17685	17726	17771
0-15	300	17686	17727	17772
0-25	833	17687	17728	17773
0-50	3,333	17688	17729	17774
0-100	16,666	<>	17730	17775
0-150	25,000	17690	17731	17776
0-250	41,166	17691	17732	17777
0-300	50,000	17692	17733	17778
0-500 †	83,333	<>	17734 †	17779 †

† External multipliers, Model 183 are furnished on AC meters having a range of 500 volts or higher. All others have self-contained multipliers

<> Available on special order

AC Voltage Meters Rectifier Type, Self-shielding Movement				
Range	Appprox. Impedance (Ohms)@ 60 Hz	Model / Size and Catalog Number		
		2-1/2" Model 2142	3-1/2" Model 2143	4-1/2" Model 2144
0-5	2000 Ohms Per Volt	17460	17542	17640
0-10		<>	17543	17641
0-15		<>	17544	17642
0-50		<>	17545	17643
0-150		17462	17546	17644
0-300		<>	<>	17645

<> Available on special order

Ordering Information

DC Milliammeters, Self-shielding Movement					
Range	Appprox. Impedance (Ohms) @ 60 Hz	Model / Size and Catalog Number			
		1-1/2" Model 2121	2-1/2" Model 2122	3-1/2" Model 2123	4-1/2" Model 2124
0-1	43.0	17825	17430	17510	17600
0-3	2.0	<>	17431	17511	17601
0-5	2.0 (20) †	17826	17432	17512	17602
0-10	10.0 (2.2) †	17827	17433	17513	17603
0-15	6.6 (2.2) †	17828	17434	<>	<>
0-20	5.0	<>	<>	17515	<>
0-25	4.0 (6.0) †	17829	17436	17516	17606
0-50	2.0 (3.0) †	17830	17437	17517	17607
0-100	1.0 (1.5) †	17832	17438	17518	17608
0-150	.66 (1.0) †	17833	17439	17519	17609
0-200	.50 (.75) †	17834	17440	17520	17610
0-250	.40 (.60) †	17835	17441	17521	17611
0-300	.33 (.50) †	17836	17442	17522	17612
0-500	.20 (.30) †	17837	17443	17523	17613
0-750	.13	<>	<>	17524	17614
0-1000	.05	<>	17444	<>	17615

† Resistances of Model 2121 shown in ( )

<> Available on special order

DC Microammeters, Self-shielding Movement					
Range	Appprox. Impedance (Ohms) @ 60 Hz	Model / Size and Catalog Number			
		1-1/2" Model 2121	2-1/2" Model 2122	3-1/2" Model 2123	4-1/2" Model 2124
0-50	1800 (5500) †	17815	17418	17499	17589
0-100	1800	17816	17420	17501	17591
0-200	1100	17818	17422	17503	17593
0-500	90 (190) †	17819	17424	17505	17595
25-0-25	1800 (5500) †	17820	<>	17506	17596
50-0-50	1800	17821	17425	17507	17597
100-0-100	1100	17822	17426	17508	17598
500-0-500	43	17823	35063	17509	17599

† Resistances of Model 2121 shown in ( )

<> Available on special order

Century Style Analog Panel Meters

Ordering Information

Taut Band DC Microammeters, Self-shielding Movement				
Range	Appprox. Impedance (Ohms) @ 60 Hz	Model / Size and Catalog Number		
		2-1/2" Model 2122T	3-1/2" Model 2123T	4-1/2" Model 2124T
0-10	4900	17415	17496	17586
0-15	1960	17416	17497	17587
0-25	1960	17417	17498	17588
0-50	960	17419	17500	17590
0-100	500	17421	17502	17592
0-200	234	17423	<>	17594

<> Available on special order

DC Ammeters, Self-shielding Movement					
Range	Appprox. Impedance (Ohms) @ 60 Hz	Model / Size and Catalog Number			
		1-1/2" Model 2121	2-1/2" Model 2122	3-1/2" Model 2123	4-1/2" Model 2124
0-1	.050	17800	17400	17475	17565
0-1.5	.003	<>	17401	17476	<>
0-2	.025	17801	17402	17477	17567
0-3	.0166	17802	17403	17478	17568
0-5	.010	17803	17404	17479	17569
0-10	.005	17805	17405	17480	17570
0-15	.0033	17806 †	17406	17481	17571
0-25	.0020	17807 †	17407	17482	17572
0-30	.0017	<>	17408	17483	17573
0-50	.001	17808 †	17409	17484	17574
0-100	10.0	<>	17410 †	17485 †	17575 †
0-150	10.0	<>	<>	17486 †	17576 †
0-200	10.0	<>	17412 †	17487 †	17577 †
0-300	10.0	<>	-	17488 †	17578 †
0-500	10.0	<>	-	17489 †	17579 †
2-0-2	.025	<>	-	35064	-
5-0-5	.010	<>	-	35072	-
15-0-15	.0033	<>	-	17490	-
30-0-30	.0017	<>	-	17491	-

† 1-1/2" DC current meters are self-contained through 10 amps; higher ranges are supplied as 50mV meters and require an external shunt;

† 2-1/2", 3-1/2" and 4-1/2" meters are self-contained through 50 amps; higher ranges are 50mV and require use of an external shunt

<> Available on special order

Ordering Information

Wattmeters / Dynamometer Type, Not UL				
Range	Maximum		Model / Size and Catalog Number	
	Volts	Amps	3-1/2" Model 2173	4-1/2" Model 2174
0-10	150	.175	17875 *	17890 *
0-20	150	.400	17876	17891 *
0-30	150	0.650	17877 *	17892 *
0-30	300	0.300	18879 *	17894 *
0-50	300	0.500	17880 *	17895 *
0-75	150	1.0	17881	17896
0-150	150	2.0	17882	17897
0-300	150	4.0	17883	17898
0-600	300	4.0	17884	17899
0-750	150	10.0	17885	17900
0-1500	300	10.0	17886	17901
0-3000	300	20.0	17887	17902

* Compensated wattmeters: calibrated for either magnetic or non-magnetic panels and for a frequency of 25-125Hz

Percent Moter Load Meters, Self-shielding Movement					
Type	Maximum		Model / Size and Catalog Number		
	Rating	3-1/2" Model No.	Catalog No.	4-1/2" Model No.	Catalog No.
DC (Note 1)	30 mV	2123	17564	2124	17637
AC (Note 2)	5 amps	2153	17711	2154	17756

1. These DC meters require an external shunt and an 8 to 10Ω 2W wire-wound potentiometer (customer supplied)

2. These AC meters require use of a current transformer

Ordering Information

Frequency Meters, Self-shielding Movement, Not UL				
Range	Approx. Impedance (Ohms) @ 60 Hz	Model / Size and Catalog Number		
		2-1/2" Model 2182	3-1/2" Model 2183	4-1/2" Model 2184
45-55 Hz	120V	35118	35124	35130
55-65 Hz	120V	35120	35126	35132
380-420 Hz	120V	35122	35128	35134
45-55 Hz	240V	35119	35125	35131
55-65 Hz	240V	35121	35127	35133
380-420 Hz	240V	35123	35129	35135

DC Millivoltmeters, Self-shielding Movement				
Range	Approx. Impedance (Ohms) @ 60 Hz	Model / Size and Catalog Number		
		2-1/2" Model 2122	3-1/2" Model 2123	4-1/2" Model 2124
0-50	10.0	17472	17540	17636
50-0-50	20.0	<>	17541	17635

<> Available on special order

Ordering Information

DC Voltage Meters, Self-shielding Movement					
Range	Approx. Impedance (Ohms) @60 Hz	Model / Size and Catalog Number			
		1-1/2" Model 2121	2-1/2" Model 2122	3-1/2" Model 2123	4-1/2" Model 2124
0-5		17840	17445	17525	17618
0-8		<>	<>	<>	17619
0-10		17842	17446	17527	17620
0-15		17843	17447	17528	17621
0-25		17844	17448	17529	17622
0-30		17845	17449	17530	17623
0-50	1000 Ohms Per Volt	17846	17450	17531	17624
0-100		17848	17451	17532	17625
0-150		17849	17452	17533	17626
0-200		<>	<>	17534	17627
0-250		<>	<>	17535	<>
0-300		-	17455	17536	17629
0-300	2000 Ohms Per Volt	17850	<>	<>	<>
0-500		17851 †	17456	17537	17630
0-750		<>	<>	17538	17631
0-1000		<>	17458 †	17539 †	17632 †

† External mulipliers (Model 183) are furnished on 1-1/2" DC meters 500 volts or higher;
on 2-1/2" DC meters 750 volts or higher;
and on 3-1/2" and 4-1/2" DC meters 1,000 volts or higher.
All others have self-contained multipliers

<> Available on special order

4-20 DCmA Process Meters			
Size	Scale	Model	Catalog Number
3-1/2"	0-100%	2123	35027
4-1/2"	0-100%	2124	35028

MADE IN THE USA SINCE 1936 RELIABILITY BEYOND MEASURE

Century Style Analog Panel Meters

Frequency Meter Specifications	
Accuracy	45-55Hz ± 0.3Hz (120V-240V)
	55-65Hz ± 0.3Hz (120V-240V
	380-420Hz ± 1.2Hz (120V-240V)
Movement	Small core magnet, self-shielding
Suspension	Pivot and jewel
Tracking	±3%
Shielding	Calibration is unaffected by magnetic panel mounting
Center Scale Value	50/60/400Hz
Power Consumption	1.6VA
Max. Input Voltage (10 sec)	150, 120V normal; 280, 240V normal
Dial	Each dial arc is calibrated to track the specific type of movement used
Operating Temperature	-4ºF to +149ºF (-20ºC to +65ºC)
Case	High density black plastic
Pointer	Knife-edge, with black matte finish
Scale Length	Model 2182: 1.88” (47.2mm)
	Model 2183: 2.48” (63.0mm)
	Model 2184: 3.68” (93.5mm)
Net Weight	Model 2182: 5oz (0.14kg)
	Model 2183: 6oz (0.17kg)
	Model 2184: 9oz (0.26kg)
Warm-up Time	5 minutes

Watt Meter Specifications	
Accuracy	±2% F.S.; Compensated Meters: ±3% F.S.
Movement	Dynamometer
Suspension	Pivot and jewel
Tracking	±3%
Shielding	Calibration is unaffected by magnetic panel mounting
Response Time	1.5 seconds maximum
Overload (1 sec.)	10 times F.S.
Overload (Continuous)	1.5 times F.S.
Repeatability	2%
Dial	Each dial arc is calibrated to track the specific type of movement used
Resistance	±15% of meter impedance
Operating Temperature	-4ºF to +149ºF (-20ºC to +65ºC)
Case	High density black plastic
Pointer	Knife-edge, with black matte finish
Scale Length	Model 2173: 2.48” (63.0mm)
	Model 2174: 3.68” (93.5mm)
Net Weight	Model 2173: 9oz (0.26kg)
	Model 2174: 13oz (0.37kg)

Century Style Analog Panel Meters

Specifications for Other Meters	
Accuracy	±2% F.S. Iron Vane, ±3% F.S. Rectified
Movement	Models 2152, 2153, 2154: Iron-vane, magnetically damped. 2121 and 2121T: small core magnet, all others Annular, self-shielding
Suspension	Pivot and jewel except for "T" models which have taut band movement
Tracking	±3%
Shielding	Calibration is unaffected by magnetic panel mounting
Response Time	1.5 seconds maximum
Overload (1 sec.)	10 times F.S.
Overload (Continuous)	1.5 times F.S.
Repeatability	2% pivot and jewel, 0.5% taut band
Dial	Each dial arc is calibrated to track the specific type of movement used
Resistance	±15% of meter impedance
Operating Temperature	-4ºF to +149ºF (-20ºC to +65ºC)
Case	High density black plastic
Pointer	Knife-edge, with black matte finish
Scale Length	Model 2121 & 2121T: 1.25" (31.7mm)
	Model 2152: 1.86" (47.2mm)
	Model 2122, 2122T, 2142: 2.07" (52.7mm)
	Model 2153: 2.48" (63.0mm)
	Model 2123, 2123T, 2143: 2.75" (69.8mm)
	Model 2154: 3.68" (93.5mm)
	Model 2124, 2124T, 2144: 4.09" (103.9mm)
Net Weight	Model 2121 & 2121T: 2oz (0.06kg)
	Model 2152: 5oz (0.14kg)
	Model 2153: 6oz (0.17kg)
	Model 2122, 2122T, 2142: 7oz (0.20kg)
	Model 2123, 2123T, 2143: 8oz (0.23kg)
	Model 2154: 9oz (0.26kg)
	Model 2124, 2124T, 2144: 11oz (0.31kg)

Century Style Analog Panel Meters

MADE IN THE USA SINCE 1936 RELIABILITY BEYOND MEASURE

Dimensions

1-1/2" Models 2121, 2121T

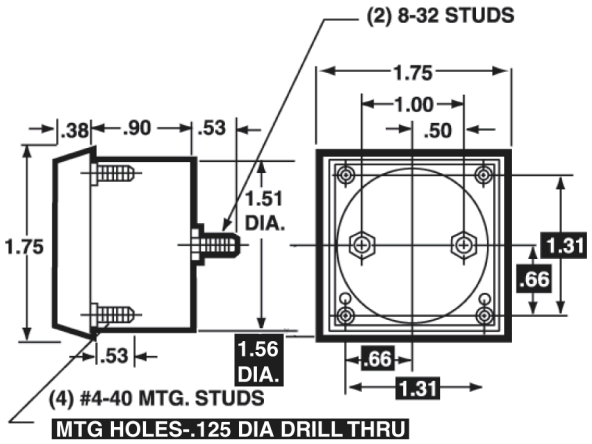

2-1/2" Models 2122, 2122T, 2142, 2152, 2182

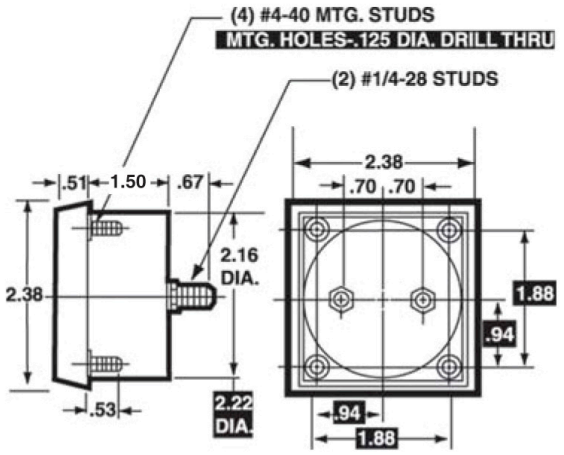

3-1/2" Models 2123, 2123T, 2143, 2153, 2183

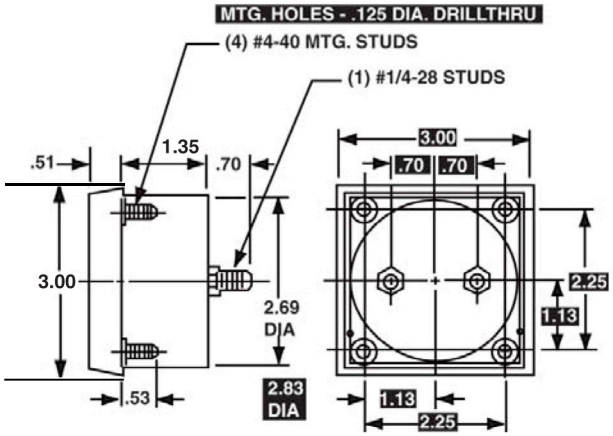

3-1/2" Model 2173

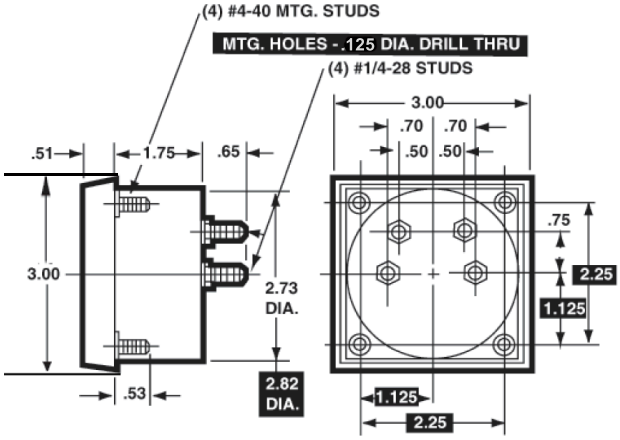

4-1/2" Model 2174

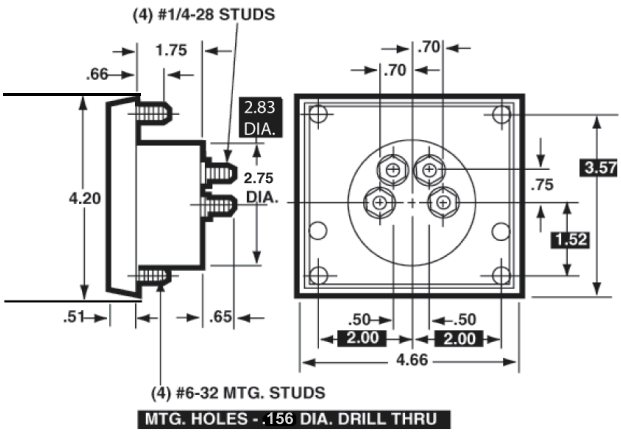

4-1/2" Models 2124, 2124T, 2144, 2154, 2184

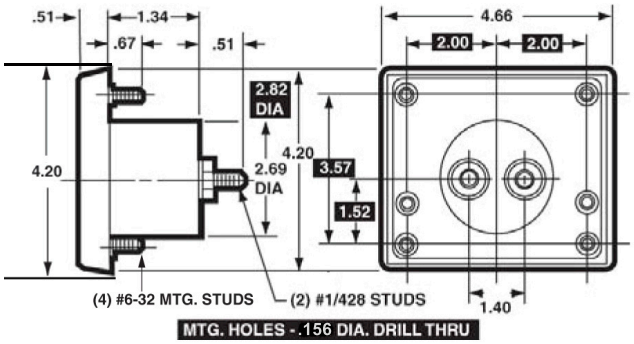

Mouser Electronics

Authorized Distributor

Click to View Pricing, Inventory, Delivery & Lifecycle Information:

Simpson:

17588 17541 17587 17569 17536 17543 17568 17532 17577 17564 17572 17576 17545 17586 17573
17567 17534 17589 17523 17506 17540 17533 17530 17502 17597 17508 17538 17593 17565 17575
17578 17579 17539 17500 17522 17546 17544 17542 17503 17535 17574 17525 17520 17570 17528
17505 17531 17527 17529 17537 17507 17521 17501 17571 17524 17509 17671 17773 17756 17777
17752 17761 17763 17774 17726 17725 17775 17751 17771 17754 17762 17764 17755 17760 17753
17779 17711 17706 17702 17717 17719 17739 17708 17733 17734 17730 17732 17731 17729 17727
17707 17728 17703 17700 17772 17716 17701 17718 17776 17710