PRODUCT NUMBER	DIM "J"	DIM "K"
76308-XYY(LF)	SEE SHEET 2/2	

WHEN NEEDED, SUFFIX LETTER "LF" INDICATES THE PRODUCT IS RoHS COMPATIBLE, SEE NOTE 5

WHEN SUFFIX "LF" IS REQUIRED, 2µm MIN MATTE TIN OVER 1.27 MIN Ni IS SUPPLIED INSTEAD OF SnPb.

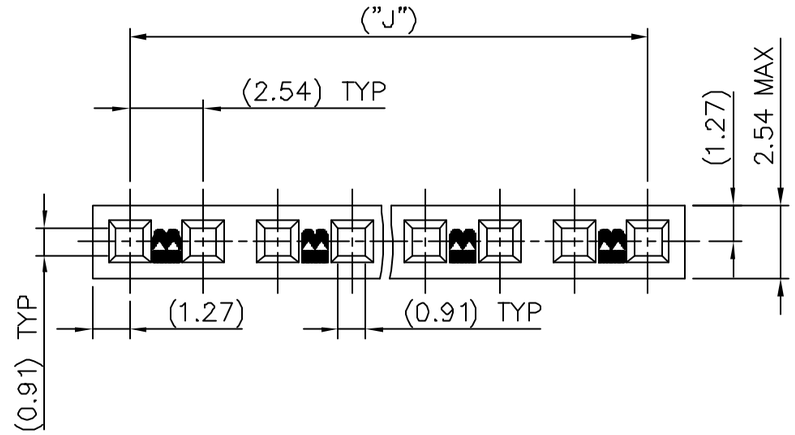

NOTES:

1 MATERIAL HOUSING: THERMOPLASTIC POLYESTER 30 % GLASS FILLED, COLOUR BLUE, FLAME RETARDANT PER UL 94-V0.
2 MATERIAL BOX: BRASS ASTM B 36 C 26000-H02
3 MATERIAL SPRING: BERYLLIUM COPPER ASTM B 194 C 17200-TF 00.
4 PLATING: SEE NEXT SHEET
5 – RoHS COMPATIBLE PRODUCT SPECIFICATIONS

a – PLATING:

– "LF" MEANS THE PRODUCT IS LEAD-FREE, 2µm MINIMUM MATTE TIN OVER 1.27µm MINIMUM NICKEL UNDERPLATE.

b – MANUFACTURING PROCESS COMPATIBILITY

– THE HOUSING WILL WITHSTAND EXPOSURE TO 260°C ±5°C SOLDER BATH TEMPERATURE FOR 5 SECONDS IN A WAVE SOLDER APPLICATION WITH A 1.6mm MIN THICK CIRCUIT BOARD.

c – LABELING:

– MEETS PACKAGING SPECS AS PER GS-14-920

d – LEGAL STATEMENT: SEE GS-22-008

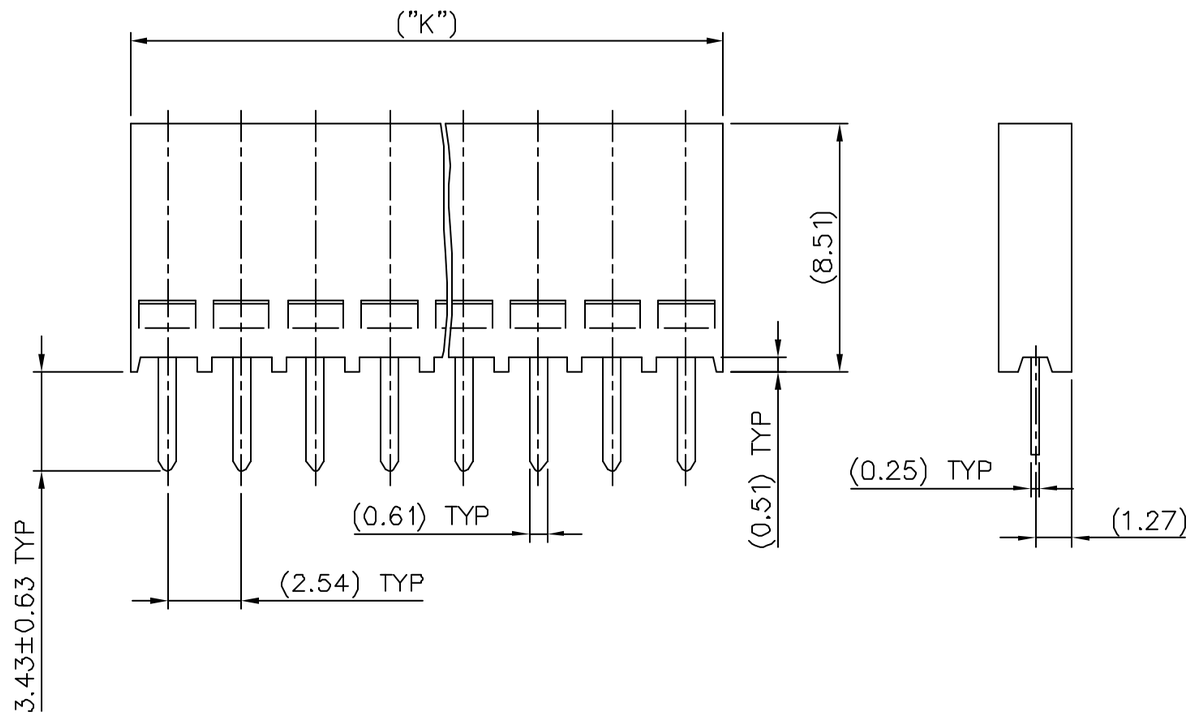

76308-1XXLF &-2XXLF ARE SIMILAR TO 76308-(1*2)XX, THE SUFFIX 'LF' IS ADDED FOR LEAD FREE IDENTIFICATION.
EXCEPT FOR 76308-9XX; 2µm MIN MATTE TIN OVER 1.27µm Ni IS SUPPLIED INSTEAD OF SnPb.

ltr	ecn no	dr	date
M	F06-0216	DLE	06.07.03
G	V60456	OMA	96.03.11
H	F80325	PNZ	98.05.06
J	F10568	DLE	01.10.25
K	F05.0235	DLE	05.08.25
L	F05-0282	DLE	05.11.03

sheet index	revision	M	L
	sheet	1	2

mat'l. code: SEE NOTES
surface: ISO 1302
tolerance: ISO 406 ISO 1101
tolerances unless otherwise specified: angles ±2°; linear ±0.13
projection
mm
scale 5:1

dr	O. MATHEVON	96.01.29
engr	AESCHBACHER	96.01.29
chr	O. MATHEVON	96.01.29
appd	M. AE	96.01.29

product family: BERGCON
title: V. C. C. SINGLE ROW .100
dwg no: 76308
sheet 1 of 2
size: A3
type: CUSTOMER Drawing

form: A3

FCIconnect.com
Copyright FCI

PRODUCT NUMBER	NBR OF POS	DIM "J"	DIM "K"
76308-X02(LF)	1x02	(2.54)	(5.08)
76308-X03(LF)	1x03	(5.08)	(7.62)
76308-X04(LF)	1x04	(7.62)	(10.16)
76308-X05(LF)	1x05	(10.16)	(12.70)
76308-X06(LF)	1x06	(12.70)	(15.24)
76308-X07(LF)	1x07	(15.24)	(17.78)
76308-X08(LF)	1x08	(17.78)	(20.32)
76308-X09(LF)	1x09	(20.32)	(22.86)
76308-X10(LF)	1x10	(22.86)	(25.40)
76308-X11(LF)	1x11	(25.40)	(27.94)
76308-X12(LF)	1x12	(27.94)	(30.48)
76308-X13(LF)	1x13	(30.48)	(33.02)
76308-X14(LF)	1x14	(33.02)	(35.56)
76308-X15(LF)	1x15	(35.56)	(38.10)
76308-X16(LF)	1x16	(38.10)	(40.64)
76308-X17(LF)	1x17	(40.64)	(43.18)
76308-X18(LF)	1x18	(43.18)	(45.72)
76308-X19(LF)	1x19	(45.72)	(48.26)
76308-X20(LF)	1x20	(48.26)	(50.80)
76308-X21(LF)	1x21	(50.80)	(53.34)
76308-X22(LF)	1x22	(53.34)	(55.88)
76308-X23(LF)	1x23	(55.88)	(58.42)
76308-X24(LF)	1x24	(58.42)	(60.96)
76308-X25(LF)	1x25	(60.96)	(63.50)
76308-X26(LF)	1x26	(63.50)	(66.04)
76308-X27(LF)	1x27	(66.04)	(68.58)
76308-X28(LF)	1x28	(68.58)	(71.12)
76308-X29(LF)	1x29	(71.12)	(73.66)
76308-X30(LF)	1x30	(73.66)	(76.20)

PRODUCT NUMBER	NBR OF POS	DIM "J"	DIM "K"
76308-X31(LF)	1x31	(76.20)	(78.74)
76308-X32(LF)	1x32	(78.74)	(81.28)
76308-X33(LF)	1x33	(81.28)	(83.82)
76308-X34(LF)	1x34	(83.82)	(86.36)
76308-X35(LF)	1x35	(86.36)	(88.90)
76308-X36(LF)	1x36	(88.90)	(91.44)
76308-X37(LF)	1x37	(91.44)	(93.98)
76308-X38(LF)	1x38	(93.98)	(96.52)
76308-X39(LF)	1x39	(96.52)	(99.06)
76308-X40(LF)	1x40	(99.06)	(101.60)
76308-X41(LF)	1x41	(101.60)	(104.14)
76308-X42(LF)	1x42	(104.14)	(106.68)
76308-X43(LF)	1x43	(106.68)	(109.22)
76308-X44(LF)	1x44	(109.22)	(111.76)
76308-X45(LF)	1x45	(111.76)	(114.30)
76308-X46(LF)	1x46	(114.30)	(116.84)
76308-X47(LF)	1x47	(116.84)	(119.38)
76308-X48(LF)	1x48	(119.38)	(121.92)
76308-X49(LF)	1x49	(121.92)	(124.46)
76308-X50(LF)	1x50	(124.46)	(127.00)

9	5 µm SnPb	1.25 µm SnPb	1.3 µm Ni
2	1.0 µm Au	0.2 µm Au	1.3 µm Ni
1	0.76 µm Au	0.05 µm Au	1.3 µm Ni
PLATING CODE X	PLATING THICKNESS CONTACT AREA	PLATING THICKNESS REMAINDER	THICKNESS UNDER PLATING

mat'l. code SEE TABLE				surface ISO 1302		tolerance ISO 406 ISO 1101	projection
ltr	ecn no	dr	date	tolerances unless otherwise specified			
E	V41799	PNZ	94.12.07	angles	linear		mm
F	F60062	OMA	96.01.30				
G	V60456	OMA	96.03.11				scale N/A
H	F80325	PNZ	98.05.06	dr	O. MATHEVON	96.01.30	
J	F05-0235	DLE	05.08.25	engr	AESCHBACHER	96.01.30	
K	F05-0282	DLE	05.11.03	chr	O. MATHEVON	96.01.30	
L	F06-0216	DLE	076.07.11	appd	M. AE	96.01.30	
sheet index	revision sheet						

product family: BERGCON

title: V. C. C. SINGLE ROW .100

dwg no: 76308 | sheet 2 of | size A3

type: CUSTOMER Drawing

form: A3

FCIconnect.com
Copyright FCI