PRODUCT NO
SEE TABLE

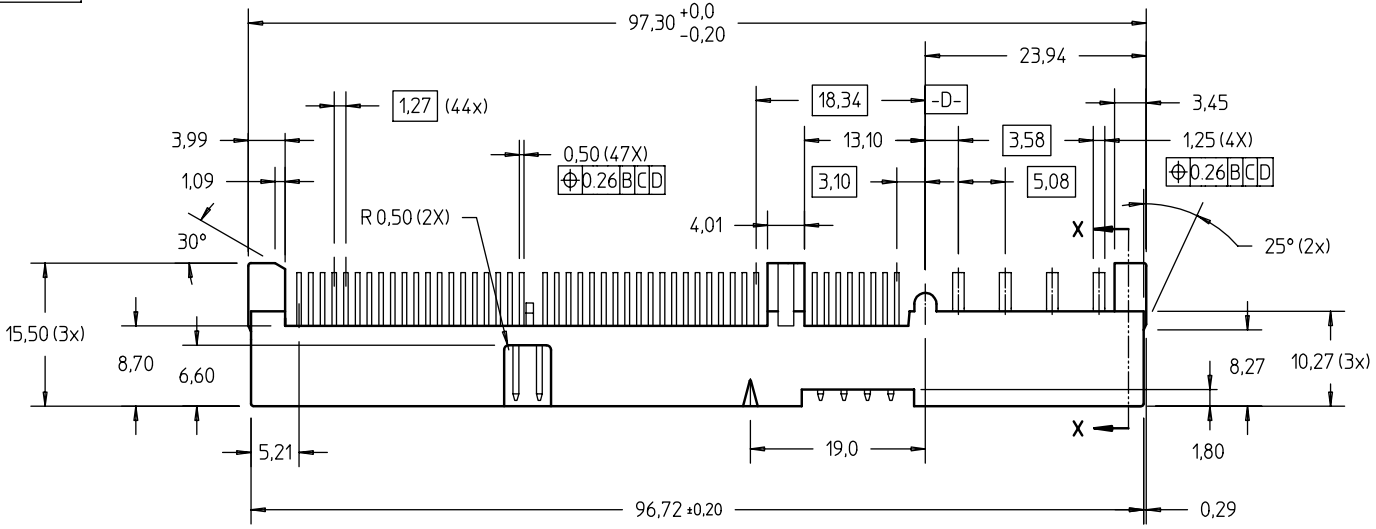

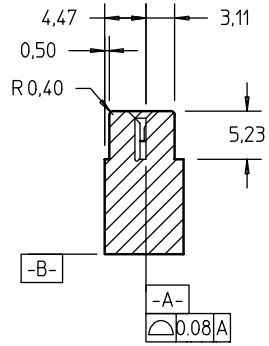

SEC X - X

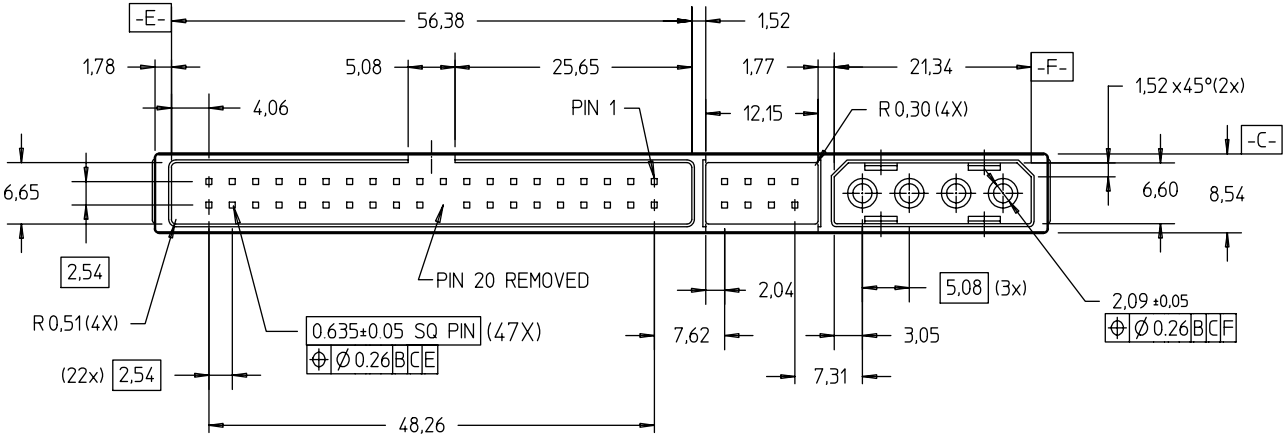

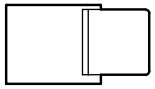

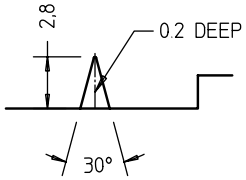

mat'l. code				surface ISO 1302	tolerance ISO 406 ISO 1101	projection	product family COMBO HEADER
ltr	ecn no	dr	date	tolerances unless otherwise specified			title
A	S04-0052	R.C.	2004-03-04	angles	linear x.x ± 0,25	mm	COMBO TWO-IN-ONE HEADER
B	S04-0108	R.C.	2004-07-29		x.xx ± 0,13		
C	S05-0115	R.C.	2005-04-19	3°	x.xxx ± 0,05	scale 1:3 : 1	
D	S07-0171	R.C.	2007-05-22	dr	R. CRASTA 2004-03-04	FCI	dwg no 10037999 sheet 1 of 3 size A4
				engr	R. CRASTA 2007-05-22		
				chr	R. CRASTA 2007-05-22		type CUSTOMER Drawing
				appd	JOEY NG 2007-05-22		
sheet index	revision sheet						

form: A4

FCIconnect.com
PDM:Rev:D
STATUS:Released
Printed: Nov 27, 2009
Copyright FCI

PRODUCT NO
SEE TABLE

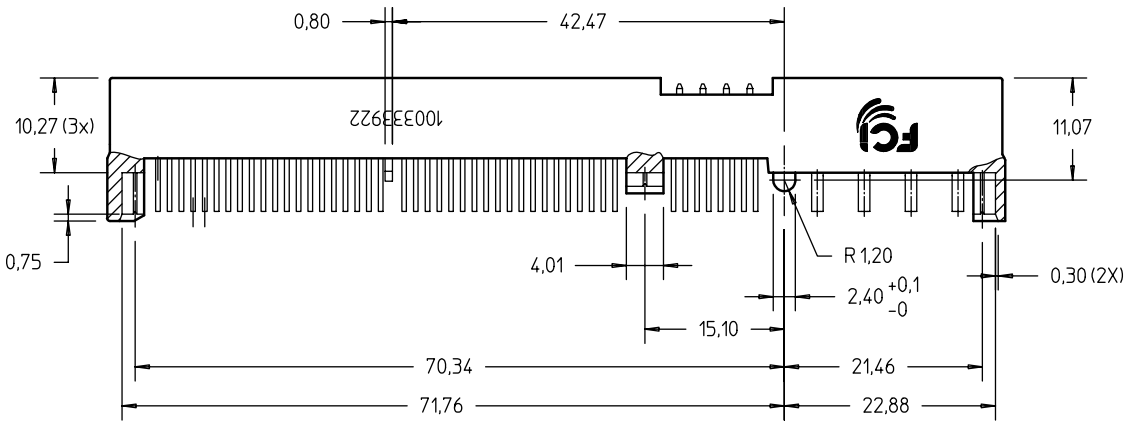

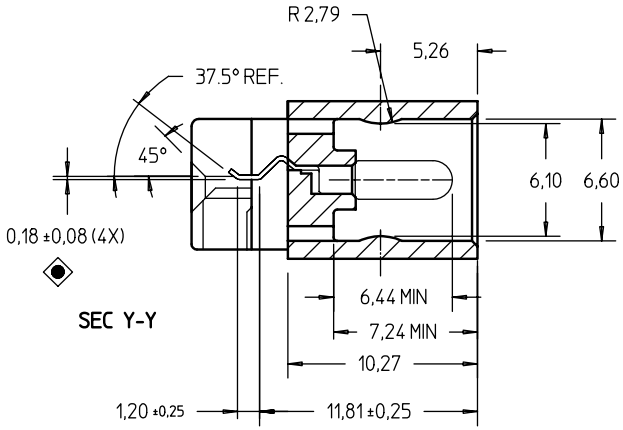

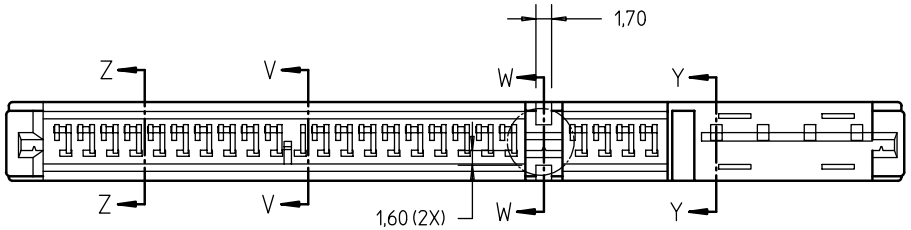

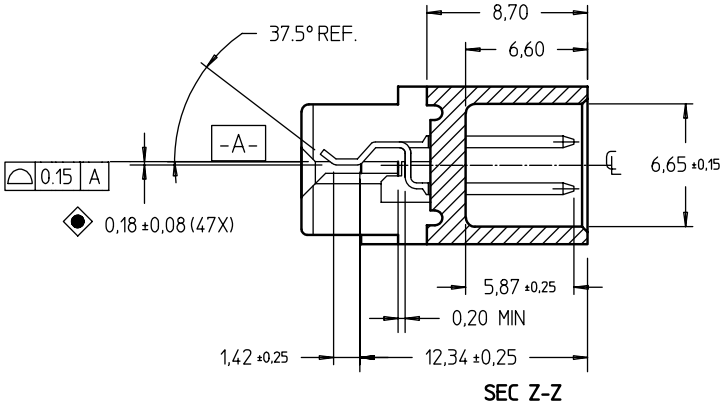

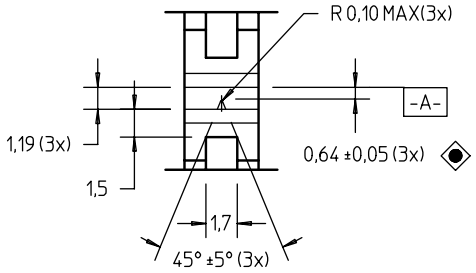

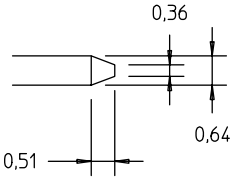

mat'l. code				surface ISO 1302	tolerance ISO 406 ISO 1101	projection	product family COMBO HEADER
ltr	ecn no	dr	date	tolerances unless otherwise specified			title
A				angles	linear		COMBO TWO-IN-ONE HEADER
B							
C						scale 1.3 : 1	
D				dr	R. CRASTA	2004-03-04	dwg no 10037999 sheet 2 of 3 size A4
				engr	R. CRASTA	2007-05-22	
				chr	R. CRASTA	2007-05-22	
				appd	JOEY NG	2007-05-22	type CUSTOMER Drawing
sheet index	revision sheet						

form: A4

PDM:Rev:D
STATUS:Released
Printed: Nov 27, 2009
Copyright FCI
FCIconnect.com

PRODUCT NO	SEAGATE P/N	REMARKS
10037999-001LF	100315361	OBSOLETE
10037999-002LF	100333922	-

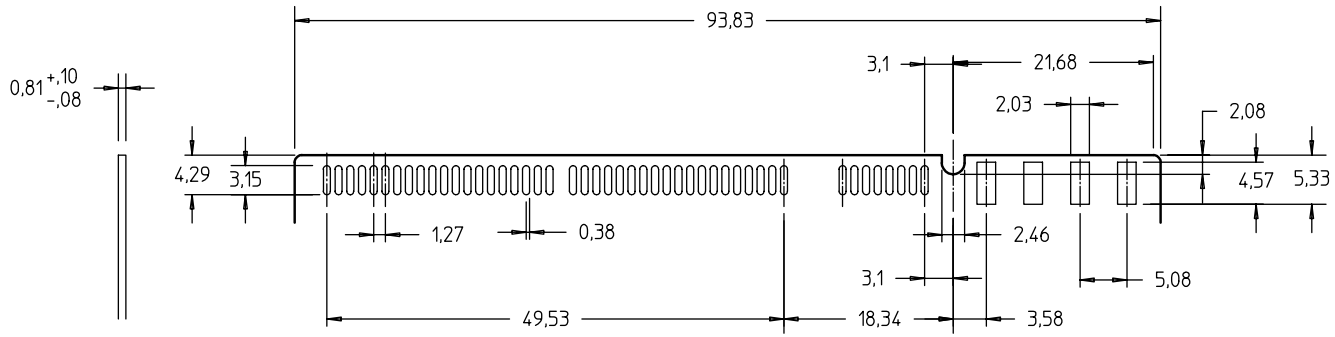

RECOMMENDED PCB LAYOUT

NOTES :

1 MATERIAL
HOUSING : 40% GLASS FILLED PPS BLACK UL 94V-0
SIGNAL PIN : BRASS C2680 R-H
FINISH : UNDER PLATING 50u" MIN NICKEL
CONTACT AREA : GOLD FLASH(2 u"MIN)
SOLDER TAIL : 50u' MIN TIN 100%
POWER PIN : BRASS C2680 R-H
FINISH : 40u"-80u" TIN PLATING OVER 20u"-30u" COPPER

2 WARPAGE MUST MEET SPECS BEFORE AND AFTER EXPOSURE TO SOLDER REFLOW TEMP OF 245°C MAX

3 ◈ CRITICAL DIMENSIONS; SPC REQUIRED

4 PIN RETENTION FORCE: POWER : 5 LBS MIN PER PIN
SIGNAL: 3.5 LBS MIN PER PIN.

5 PACKAGING: CLEAR ANTISTATIC TUBE.

6 THIS PRODUCT MEETS EUROPEAN UNION DIRECTIVES AND OTHER COUNTRY REGULATIONS AS DESCRIBED IN GS-22-008

7 THIS HOUSING WILL WITHSTAND EXPOSURE TO 245°C TEMPERATURE FOR 10 SECONDS IN A CONVECTION, INFRA-RED OR VAPOR PHASE REFLOW OVEN

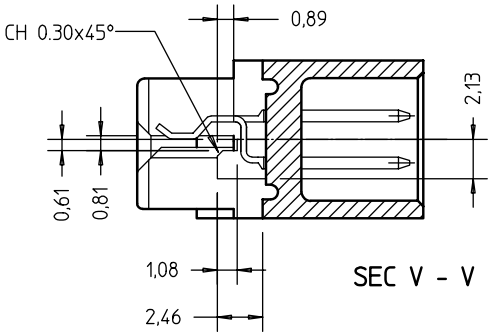

SEC V - V

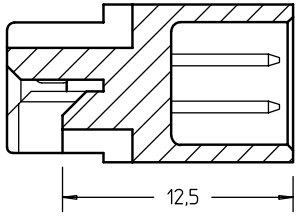

SEC W - W

mat'l. code				surface ISO 1302	tolerance ISO 406 ISO 1101	projection	product family COMBO HEADER
ltr	ecn no	dr	date	tolerances unless otherwise specified			title
A				angles	linear		COMBO TWO-IN-ONE HEADER
B							
C						scale 1:3 : 1	
D				dr	R. CRASTA	2004-03-04	dwg no 10037999 sheet 3 of 3 size A4
				engr	R. CRASTA	2007-05-22	
				chr	R. CRASTA	2007-05-22	
				appd	JOEY NG	2007-05-22	type CUSTOMER Drawing
sheet index	revision sheet						

form: A4

FCIconnect.com
PDM: Rev:D
STATUS: Released
Copyright FCI
Printed: Nov 27, 2009