PRODUCT NUMBER
SEE TABLE

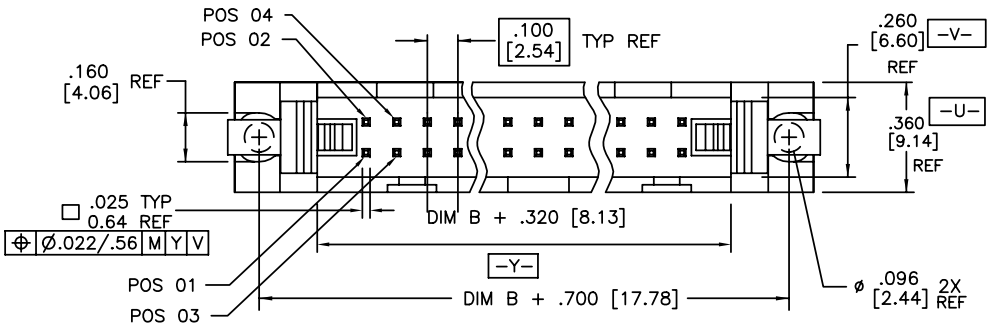

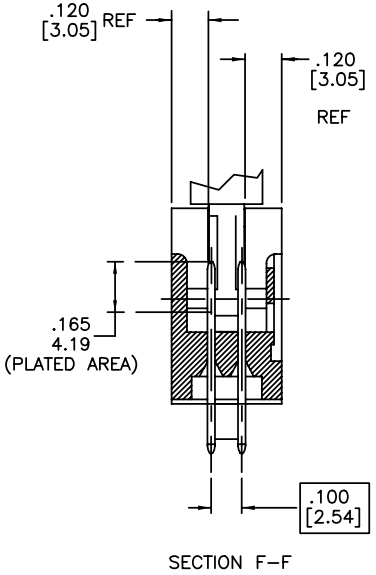

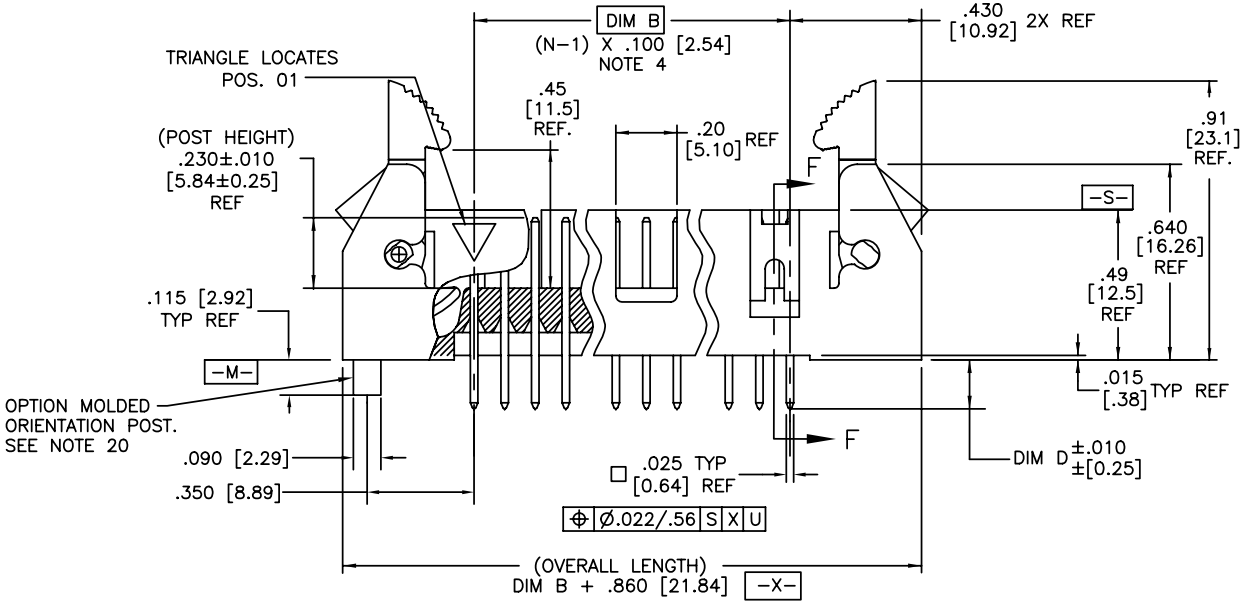

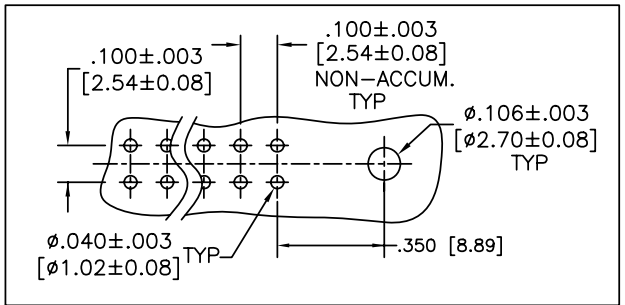

RECOMMENDED PCB HOLE PATTERN

mat'l. code				surface ISO 1302	tolerance ISO 406 ISO 1101	projection	product family QUICKIE
ltr	ecn no	dr	date	tolerances unless otherwise specified			title
BA	N08-0073	Bobby St	4/28/08	angles	linear .XX±.01/.X±0.3	INCH/MM	HEADER, QUICKIE SEA-HORSE, VERTICAL
BB	N09-0007	R.B	2009/01/12		.XXX±.005/.XX±0.13		
BC	ELX-N-012097	J.Z	2012-07-04	0°±2°	.XXXX±.0020/.XXX±0.051	scale 1:1	
BD	ELX-N-13354	DCS	2012-11-02	dr	M. CORNMAN 8/21/90		dwg no 65863 sheet 1 of 23 size A3
BE	ELX-N-17979	TIM	2014-06-17	engr	M. SMYK 8/21/90		
				chr	M. SMYK 8/21/90		type Product Customer Drawing
				appd	M. SMYK 8/21/90		

sheet index	revision	BE	BE	BE	BE	BE	BE	BE	BE	BE	. . .	BE
	sheet	1	2	3	4	5	6	7	8	9	. . .	23

Copyright FCI
FCIconnect.com

NOTES:

1. HOUSING MAT'L: HIGH TEMPERTURE THERMOPLASTIC. UL94V-0.
   COLOR : BLACK
2. PIN MATERIAL: PHOSPHOR-BRONZE
3. 3 LBS/1.36 KG MIN. RETENTION.
4. TO DETERMINE DIMENSION:
   N = NUMBER OF POSITIONS.
   EXAMPLE: 10 POS., (N-1) x .100[2.54]=.900[22.87]
5. RETENTIVE LEG:
   RETENTION FEATURE AVAILABLE ON CONNECTORS WITH .105/2.67, .120/3.05 OR .150/3.81 TAIL LENGTH. RETENTION P/N INCLUDES THE LETTER "R" AFTER THE EXISTING P/N.
   EXAMPLE : 65863-XXX FOR EXISTING P/N
   65863-XXXR FOR RETENTION P/N
   RETENTION FEATURE LOCATION IS MANUFACTURERS OPTION.
   5LB/2.3KG MAX INSERTION FORCE AND .25LB./1KG MIN RETENTION FORCE PER RETENTIVE PIN USING .062/1.57 THICK CIRCUIT BOARD AND RECOMMENDED HOLE PATTERN. RETENTIVE LOCATION AT THE DISCRETION OF THE MANUFACTURER. OMIT FROM PRODUCT NUMBER IF THIS FEATURE IS NOT APPLICABLE.
6. 1° MAX DRAFT PERMISSIBLE ON ALL SURFACES UNLESS OTHERWISE SPECIFIED.
7. PLATING ON LEAD-IN PORTION OF PIN IS MANUFACTURING OPTION.
8. L.P. LATCHES TO BE USED WITH FEMALE CONNECTOR WITHOUT STRAIN RELIEF, , STANDARD LATCHES TO BE USED WITH FEMALE CONNECTOR WITH STRAIN RELIEF.
9. RECOMMENDED MOUNTING SCREW SIZE : #2-56 FILLISTER HEAD MACHINE SCREW, 1/4" LONG FOR 1/16" AND 3/32" BOARD, 5/16" LONG FOR 1/8" BOARD.
10. DASH -7XX IS POLARIZED (PIN MISSING).
11. UNDERPLATING: 50μ"/1.27μm Ni.
12. ADD "LF" SUFFIX AT THE END OF PART NUMBER FOR LEAD FREE OPTION.
13. THIS PRODUCT MEETS EUROPEAN UNION DIRECTIVES AND OTHER COUNTRY REGULATION AS DESCRIBED IN GS-22-008.
14. FOR POLARIZATION, SPECIFY POSITION NUMBER (i.e.. 03= PIN 3) TO OMIT PIN. OMIT FROM PRODUCT NUMBER IF THIS FEATURE IS NOT APPLICABLE.
15. THE HOUSING WILL WITHSTAND EXPOSURE TO 260癈 PEAK TEMPERATURE FOR 15 SECONDS IN A WAVE SOLDER APPLICATION WITH A 1.5mm MINIMUM THICK CIRCUIT BOARD. SEE APPLICATION NOTES/PROCEDURES IF THEY ARE AVAILABLE.
16. "THIS PRODUCT HAS 100% TIN PLATING IN THE INTERFACE AND HAS NOT BEEN TESTED FOR WHISKER GROWTH IN ALL INTERCONNECT ENVIRONMENTS."
17. PLATING OPTIONS:
    PERFORMANCE PLATING WILL BE EITHER GOLD OR GXT ON CONTACT OR TAIL, OPTIONALLY TIN ON TAIL.
18. THE PART NUMBER IN THE DASH NUMBER WITH A LETTER "S" WILL HAVE A SPECIAL SEA HORSE USED.
19. LEAD FREE PLATING: 100u''~160u''/2.54u~4.06u PURE Sn.
20. 65863-XXXP, P-DESIGNATE ORIENTATION POST.(SEE PAGE 23)
21. 65863-XXXF, F-PLATING FOUR SIDES ON CONTACT AREA.(SEE PAGE 23)

HEADER STYLE (LATCHES NOT SHOWN)

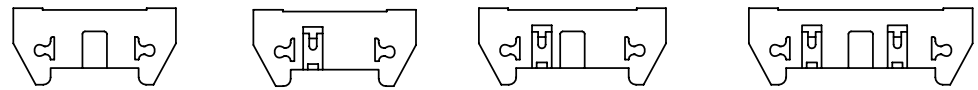

latch style(see note 8 and note 18)

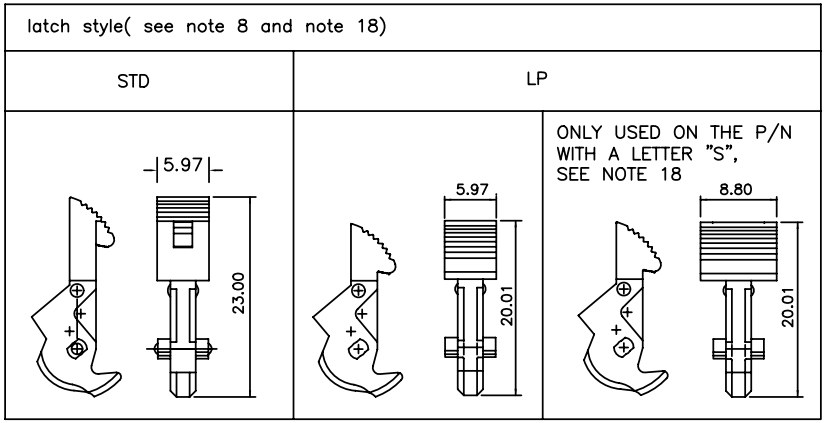

mat'l. code				surface ISO 1302 √	tolerance ISO 406 ISO 1101	projection	product family QUICKIE
ltr	ecn no	dr	date	tolerances unless otherwise specified			title
BE				angles	linear .XX±.01/.X±0.3	INCH/MM	HEADER, QUICKIE SEA-HORSE, VERTICAL
					.XXX±.005/.XX±0.13		
				0°±2°	.XXXX±.0020/.XXX±0.051	scale 1:1	
				dr	M. CORNMAN 8/21/90		dwg no 65863 sheet 2 of 23 size A3
				engr	M. SMYK 8/21/90		
				chr	M. SMYK 8/21/90		
				appd	M. SMYK 8/21/90		type Product Customer Drawing
sheet index	revision sheet						

Copyright FCI
FCIconnect.com

PRODUCT NO NOTE 12,13	SIZE	LATCH NOTE 8	DIM B	DIM D	TERMINAL PLATING	STYLE	
65863–001	2x5	NO	.400/10,160	.105/ 2,67	30u"/0.76u MIN (NOTE 17) OVER 50u"/1.27u Ni	A	
–002				.105/ 2,67	120u"~200u"/3.04um~5.08umTIN/LEAD		NOTE 16,19
–003				.150/ 3,81	30u"/0.76u MIN (NOTE 17) OVER 50u"/1.27u Ni		
–004				.150/ 3,81	120u"~200u"/3.04um~5.08umTIN/LEAD		NOTE 16,19
–005				.675/17,15	30u"/0.76u MIN (NOTE 17) OVER 50u"/1.27u Ni		
–006	2x5		.400/10,160	.675/17,15	120u"~200u"/3.04um~5.08umTIN/LEAD	A	NOTE 16,19
–007	2x7		.600/15,240	.105/ 2,67	30u"/0.76u MIN (NOTE 17) OVER 50u"/1.27u Ni	C	
–008				.105/ 2,67	120u"~200u"/3.04um~5.08umTIN/LEAD		NOTE 16,19
–009				.150/ 3,81	30u"/0.76u MIN (NOTE 17) OVER 50u"/1.27u Ni		
–010				.150/ 3,81	120u"~200u"/3.04um~5.08umTIN/LEAD		NOTE 16,19
–011				.675/17,15	30u"/0.76u MIN (NOTE 17) OVER 50u"/1.27u Ni		
–012	2x7		.600/15,240	.675/17,15	120u"~200u"/3.04um~5.08umTIN/LEAD	C	NOTE 16,19
–013	2x8		.700/17.780	.105/ 2,67	30u"/0.76u MIN (NOTE 17) OVER 50u"/1.27u Ni	D	
–014				.105/ 2,67	120u"~200u"/3.04um~5.08umTIN/LEAD		NOTE 16,19
–015				.150/ 3,81	30u"/0.76u MIN (NOTE 17) OVER 50u"/1.27u Ni		
–016				.150/ 3,81	120u"~200u"/3.04um~5.08umTIN/LEAD		NOTE 16,19
–017				.675/17,15	30u"/0.76u MIN (NOTE 17) OVER 50u"/1.27u Ni		
–018	2x8		.700/17.780	.675/17,15	120u"~200u"/3.04umTIN/LEAD		NOTE 16,19
–019	2x10		.900/22,860	.105/ 2,67	30u"/0.76u MIN (NOTE 17) OVER 50u"/1.27u Ni		
–020				.105/ 2,67	120u"~200u"/3.04umTIN/LEAD		NOTE 16,19
–021				.150/ 3,81	30u"/0.76u MIN (NOTE 17) OVER 50u"/1.27u Ni		
–022				.150/ 3,81	120u"~200u"/3.04umTIN/LEAD		NOTE 16,19
–023				.675/17,15	30u"/0.76u MIN (NOTE 17) OVER 50u"/1.27u Ni		
–024	2x10		.900/22,860	.675/17,15	120u"~200u"/3.04umTIN/LEAD		NOTE 16,19
–025	2x13		1.200/30,480	.105/ 2,67	30u"/0.76u MIN (NOTE 17) OVER 50u"/1.27u Ni		
–026				.105/ 2,67	120u"~200u"/3.04umTIN/LEAD		NOTE 16,19
–027				.150/ 3,81	30u"/0.76u MIN (NOTE 17) OVER 50u"/1.27u Ni		
–028				.150/ 3,81	120u"~200u"/3.04umTIN/LEAD		NOTE 16,19
–029				.675/17,15	30u"/0.76u MIN (NOTE 17) OVER 50u"/1.27u Ni		
–030	2x13		1.200/30,480	.675/17,15	120u"~200u"/3.04umTIN/LEAD		NOTE 16,19
	2x17		1.600/40,640	.105/ 2,67	30u"/0.76u MIN (NOTE 17) OVER 50u"/1.27u Ni		
–032				.105/ 2,67	120u"~200u"/3.04umTIN/LEAD		NOTE 16,19
–033				.150/ 3,81	30u"/0.76u MIN (NOTE 17) OVER 50u"/1.27u Ni		
–034				.150/ 3,81	120u"~200u"/3.04umTIN/LEAD		NOTE 16,19
–035				.675/17,15	30u"/0.76u MIN (NOTE 17) OVER 50u"/1.27u Ni		
65863–036	2x17	NO	1.600/40,640	.675/17,15	120u"~200u"/3.04umTIN/LEAD	D	NOTE 16,19

FCIconnect.com

Copyright FCI

mat'l. code		surface ISO 1302 ✓	tolerance ISO 406 ISO 1101	projection	product family QUICKIE
ltr / ecn no / dr / date		tolerances unless otherwise specified			title
BE		angles	linear .XX±.01/.X±0.3 / .XXX±.005/.XX±0.13 / .XXXX±.0020/.XXX±0.051	INCH/MM	HEADER, QUICKIE SEA–HORSE, VERTICAL
		0°±2°		scale 1:1	
		dr	M. CORNMAN	8/21/90	dwg no 65863 sheet 3 of 23 size A3
		engr	M. SMYK	8/21/90	
		chr	M. SMYK	8/21/90	
		appd	M. SMYK	8/21/90	type Product Customer Drawing
sheet index	revision sheet				

form: A3

PRODUCT NO NOTE 12,13	SIZE	LATCH NOTE 8	DIM B	DIM D	TERMINAL PLATING	STYLE	
65863-037	2x20	NO	1.900/48,260	.105/ 2,67	30u"/0.76u MIN (NOTE 17) OVER 50u"/1.27u Ni	D	
-038				.105/ 2,67	120u"~200u"/3.04um~5.08umTIN/LEAD		NOTE 16,19
-039				.150/ 3,81	30u"/0.76u MIN (NOTE 17) OVER 50u"/1.27u Ni		
-040				.150/ 3,81	120u"~200u"/3.04um~5.08umTIN/LEAD		NOTE 16,19
-041				.675/17,15	30u"/0.76u MIN (NOTE 17) OVER 50u"/1.27u Ni		
-042	2x20		1.900/48,260	.675/17,15	120u"~200u"/3.04um~5.08umTIN/LEAD		NOTE 16,19
-043	2x25		2.400/60,960	.105/ 2,67	30u"/0.76u MIN (NOTE 17) OVER 50u"/1.27u Ni		
-044				.105/ 2,67	120u"~200u"/3.04um~5.08umTIN/LEAD		NOTE 16,19
-045				.150/ 3,81	30u"/0.76u MIN (NOTE 17) OVER 50u"/1.27u Ni		
-046				.150/ 3,81	120u"~200u"/3.04um~5.08umTIN/LEAD		NOTE 16,19
-047				.675/17,15	30u"/0.76u MIN (NOTE 17) OVER 50u"/1.27u Ni		
-048	2x25	NO	2.400/60,960	.675/17,15	120u"~200u"/3.04um~5.08umTIN/LEAD	D	NOTE 16,19
-049	2x5	STD	.400/10,160	.105/ 2,67	30u"/0.76u MIN (NOTE 17) OVER 50u"/1.27u Ni	A	
-050				.105/ 2,67	120u"~200u"/3.04um~5.08umTIN/LEAD		NOTE 16,19
-051				.150/ 3,81	30u"/0.76u MIN (NOTE 17) OVER 50u"/1.27u Ni		
-052				.150/ 3,81	120u"~200u"/3.04um~5.08umTIN/LEAD		NOTE 16,19
-053				.675/17,15	30u"/0.76u MIN (NOTE 17) OVER 50u"/1.27u Ni		
-054	2x5		.400/10,160	.675/17,15	120u"~200u"/3.04um~5.08umTIN/LEAD	A	NOTE 16,19
-055	2x7		.600/15,240	.105/ 2,67	30u"/0.76u MIN (NOTE 17) OVER 50u"/1.27u Ni	C	
-056				.105/ 2,67	120u"~200u"/3.04umTIN/LEAD		NOTE 16,19
-057				.150/ 3,81	30u"/0.76u MIN (NOTE 17) OVER 50u"/1.27u Ni		
-058				.150/ 3,81	120u"~200u"/3.04umTIN/LEAD		NOTE 16,19
-059				.675/17,15	30u"/0.76u MIN (NOTE 17) OVER 50u"/1.27u Ni		
-060	2x7		.600/15,240	.675/17,15	120u"~200u"/3.04umTIN/LEAD	C	NOTE 16,19
-061	2x8		.700/17,780	.105/ 2,67	30u"/0.76u MIN (NOTE 17) OVER 50u"/1.27u Ni	D	
-062				.105/ 2,67	120u"~200u"/3.04umTIN/LEAD		NOTE 16,19
-063				.150/ 3,81	30u"/0.76u MIN (NOTE 17) OVER 50u"/1.27u Ni		
-064				.150/ 3,81	120u"~200u"/3.04umTIN/LEAD		NOTE 16,19
-065				.675/17,15	30u"/0.76u MIN (NOTE 17) OVER 50u"/1.27u Ni		
-066	2x8		.700/17,780	.675/17,15	120u"~200u"/3.04umTIN/LEAD		NOTE 16,19
-067	2x10		.900/22,860	.105/ 2,67	30u"/0.76u MIN (NOTE 17) OVER 50u"/1.27u Ni		
-068				.105/ 2,67	120u"~200u"/3.04umTIN/LEAD		NOTE 16,19
-069				.150/ 3,81	30u"/0.76u MIN (NOTE 17) OVER 50u"/1.27u Ni		
-070				.150/ 3,81	120u"~200u"/3.04umTIN/LEAD		NOTE 16,19
-071				.675/17,15	30u"/0.76u MIN (NOTE 17) OVER 50u"/1.27u Ni		
65863-072	2x10	STD	.900/22,860	.675/17,15	120u"~200u"/3.04umTIN/LEAD	D	NOTE 16,19

mat'l. code	surface ISO 1302	tolerance ISO 406 ISO 1101	projection
ltr / ecn no / dr / date	tolerances unless otherwise specified		
BE	angles	linear	.XX±.01/.X±0.3
			.XXX±.005/.XX±0.13
	0°±2°		.XXXX±.0020/.XXX±0.051
	dr	M. CORNMAN	8/21/90
	engr	M. SMYK	8/21/90
	chr	M. SMYK	8/21/90
	appd	M. SMYK	8/21/90
sheet index / revision sheet			

INCH/MM

scale 1:1

product family: QUICKIE

title: HEADER, QUICKIE SEA-HORSE, VERTICAL

dwg no: 65863 sheet 4 of 23 size A3

type: Product Customer Drawing

Copyright FCI

FCIconnect.com

form: A3

PRODUCT NO NOTES 12,13	SIZE	LATCH NOTE 8	DIM B	DIM D	TERMINAL PLATING	STYLE	
65863–073	2x13	STD	1.200/30,480	.105/ 2,67	30u"/0.76u MIN (NOTE 17) OVER 50u"/1.27u Ni	D	
–074				.105/ 2,67	120u"~200u"/3.04um~5.08umTIN/LEAD		NOTE 16,19
–075				.150/ 3,81	30u"/0.76u MIN (NOTE 17) OVER 50u"/1.27u Ni		
–076				.150/ 3,81	120u"~200u"/3.04um~5.08umTIN/LEAD		NOTE 16,19
–077				.675/17,15	30u"/0.76u MIN (NOTE 17) OVER 50u"/1.27u Ni		
–078	2x13		1.200/30,480	.675/17,15	120u"~200u"/3.04um~5.08umTIN/LEAD		NOTE 16,19
–079	2x17		1.600/40,640	.105/ 2,67	30u"/0.76u MIN (NOTE 17) OVER 50u"/1.27u Ni		
–080				.105/ 2,67	120u"~200u"/3.04um~5.08umTIN/LEAD		NOTE 16,19
–081				.150/ 3,81	30u"/0.76u MIN (NOTE 17) OVER 50u"/1.27u Ni		
–082				.150/ 3,81	120u"~200u"/3.04um~5.08umTIN/LEAD		NOTE 16,19
–083				.675/17,15	30u"/0.76u MIN (NOTE 17) OVER 50u"/1.27u Ni		
–084	2x17		1.600/40,640	.675/17,15	120u"~200u"/3.04um~5.08umTIN/LEAD		NOTE 16,19
–085	2x20		1.900/48,260	.105/ 2,67	30u"/0.76u MIN (NOTE 17) OVER 50u"/1.27u Ni		
–086				.105/ 2,67	120u"~200u"/3.04um~5.08umTIN/LEAD		NOTE 16,19
–087				.150/ 3,81	30u"/0.76u MIN (NOTE 17) OVER 50u"/1.27u Ni		
–088				.150/ 3,81	120u"~200u"/3.04um~5.08umTIN/LEAD		NOTE 16,19
–089				.675/17,15	30u"/0.76u MIN (NOTE 17) OVER 50u"/1.27u Ni		
–090	2x20		1.900/48,260	.675/17,15	120u"~200u"/3.04um~5.08umTIN/LEAD		NOTE 16,19
–091	2x25		2.400/60,960	.105/ 2,67	30u"/0.76u MIN (NOTE 17) OVER 50u"/1.27u Ni		
–092				.105/ 2,67	120u"~200u"/3.04um~5.08umTIN/LEAD		NOTE 16,19
–093				.150/ 3,81	30u"/0.76u MIN (NOTE 17) OVER 50u"/1.27u Ni		
–094				.150/ 3,81	120u"~200u"/3.04um~5.08umTIN/LEAD		NOTE 16,19
–095				.675/17,15	30u"/0.76u MIN (NOTE 17) OVER 50u"/1.27u Ni		
–096	2x25	STD	2.400/60,960	.675/17,15	120u"~200u"/3.04um~5.08umTIN/LEAD		NOTE 16,19
–097	2x30	NO	2.900/73,660	.105/ 2,67	30u"/0.76u MIN (NOTE 17) OVER 50u"/1.27u Ni		
–098				.105/ 2,67	120u"~200u"/3.04um~5.08umTIN/LEAD		NOTE 16,19
–099				.150/ 3,81	30u"/0.76u MIN (NOTE 17) OVER 50u"/1.27u Ni		
–100				.150/ 3,81	120u"~200u"/3.04um~5.08umTIN/LEAD		NOTE 16,19
–101				.675/17,15	30u"/0.76u MIN (NOTE 17) OVER 50u"/1.27u Ni		
–102		NO		.675/17,15	120u"~200u"/3.04um~5.08umTIN/LEAD		NOTE 16,19
–103		STD		.105/ 2,67	30u"/0.76u MIN (NOTE 17) OVER 50u"/1.27u Ni		
–104				.105/ 2,67	120u"~200u"/3.04um~5.08umTIN/LEAD		NOTE 16,19
–105				.150/ 3,81	30u"/0.76u MIN (NOTE 17) OVER 50u"/1.27u Ni		
–106				.150/ 3,81	120u"~200u"/3.04um~5.08umTIN/LEAD		NOTE 16,19
–107				.675/17,15	30u"/0.76u MIN (NOTE 17) OVER 50u"/1.27u Ni		
65863–108	2x30	STD	2.900/73,660	.675/17,15	120u"~200u"/3.04um~5.08umTIN/LEAD	D	NOTE 16,19

mat'l. code		surface ISO 1302 ✓	tolerance ISO 406 ISO 1101	projection	product family QUICKIE
ltr / ecn no / dr / date		tolerances unless otherwise specified			title
BE		angles	linear	INCH/MM	HEADER, QUICKIE SEA–HORSE, VERTICAL
		0°±2°	.XX±.01/.X±0.3 / .XXX±.005/.XX±0.13 / .XXXX±.0020/.XXX±0.051	scale 1:1	
		dr	M. CORNMAN	8/21/90	dwg no 65863 sheet 5 of 23 size A3
		engr	M. SMYK	8/21/90	
		chr	M. SMYK	8/21/90	
		appd	M. SMYK	8/21/90	type Product Customer Drawing
sheet index	revision sheet				

Copyright FCI
FCIconnect.com

PRODUCT NO NOTE 12,13	SIZE	LATCH NOTE 8	DIM B	DIM D	TERMINAL PLATING	STYLE
65863–109	2x5	NO	.400/10,160	.105/ 2,67	30u"/0.76u MIN (NOTE 17) OVER 50u"/1.27u Ni	A
–110	2x7		.600/15,240			C
–111	2x8		.700/17,780			D
–112	2x10		.900/22,860			
–113	2x13		1.200/30,480			
–114	2x17		1.600/40,640			
–115	2x20		1.900/48,260			
–116	2x25		2.400/60,960			
–117	2x30	NO	2.900/73,660			D
–118	2x5	STD	.400/10,160			A
–119	2x7		.600/15,240			C
–120	2x8		.700/17,780			D
–121	2x10		.900/22,860			
–122	2x13		1.200/30,480			
–123	2x17		1.600/40,640			
–124	2x20		1.900/48,260			
–125	2x25		2.400/60,960			
–126	2x30	STD	2.900/73,660	.105/ 2,67		
–127	2x20	NO	1.900/48,260	.150/ 3,81		
–128	2x20	STD	1.900/48,260			D
–129	2x5	NO	.400/10,160			A
–130	2x7		.600/15,240			C
–131	2x8		.700/17,780			D
–132	2x10		.900/22,860			
–133	2x13		1.200/30,480			
–134	2x17		1.600/40,640			
–135	2x20		1.900/48,260			
–136	2x25		2.400/60,960			
–137	2x30	NO	2.900/73,660			D
–138	2x5	STD	.400/10,160			A
–139	2x7		.600/15,240			C
–140	2x8		.700/17,780			D
–141	2x10		.900/22,860			
–142	2x13		1.200/30,480			
–143	2x17		1.600/40,640			
65863–144	2x20	STD	1.900/48,260	.150/ 3,81	30u"/0.76u MIN (NOTE 17) OVER 50u"/1.27u Ni	D

mat'l. code	surface ISO 1302 ✓	tolerance ISO 406 ISO 1101	projection
ltr / ecn no / dr / date	tolerances unless otherwise specified		
BE	angles 0°±2°	linear .XX±.01/.X±0.3; .XXX±.005/.XX±0.13; .XXXX±.0020/.XXX±0.051	INCH/MM
			scale 1:1
	dr M. CORNMAN 8/21/90		
	engr M. SMYK 8/21/90		
	chr M. SMYK 8/21/90		
	appd M. SMYK 8/21/90		
sheet index / revision sheet			

product family: QUICKIE

title: HEADER, QUICKIE SEA–HORSE, VERTICAL

dwg no: 65863 sheet 6 of 23 size A3

type: Product Customer Drawing

FCIconnect.com
Copyright FCI

PRODUCT NO NOTE 12,13	SIZE	LATCH NOTE 8	DIM B	DIM D	TERMINAL PLATING	STYLE	
65863–145	2x25	STD	2.400/60,960	.150/ 3,81	30u"/0.76u MIN (NOTE 17) OVER 50u"/1.27u Ni	D	
–146	2x30	STD	2.900/73,660	.150/ 3,81	30u"/0.76u MIN (NOTE 17) OVER 50u"/1.27u Ni	D	
–147	2x5	NO	.400/10,160	.675/17,15	15u"/0.38u MIN (NOTE 17) OVER 50u"/1.27u Ni	A	
–148	2x7		.600/15,240			C	
–149	2x8		.700/17,780			D	
–150	2x10		.900/22,860				
–151	2x13		1.200/30,480				
–152	2x17		1.600/40,640				
–153	2x20		1.900/48,260				
–154	2x25		2.400/60,960				
–155	2x30	NO	2.900/73,660			D	
–156	2x5	STD	.400/10,160			A	
–157	2x7		.600/15,240			C	
–158	2x8		.700/17,780			D	
–159	2x10		.900/22,860				
–160	2x13		1.200/30,480				
–161	2x17		1.600/40,640				
–162	2x20		1.900/48,260				
–163	2x25		2.400/60,960				
–164	2x30	STD	2.900/73,660	.675/17,15	15u"/0.38u MIN (NOTE 17) OVER 50u"/1.27u Ni	D	
–165	2x5	LP	.400/10,160	.105/ 2,67	30u"/0.76u MIN (NOTE 17) OVER 50u"/1.27u Ni	A	
–166				.105/ 2,67	120u"~200u"/3.04um~5.08umTIN/LEAD		NOTE 16,19
–167				.150/ 3,81	30u"/0.76u MIN (NOTE 17) OVER 50u"/1.27u Ni		
–168				.150/ 3,81	120u"~200u"/3.04um~5.08umTIN/LEAD		NOTE 16,19
–169				.675/17,15	30u"/0.76u MIN (NOTE 17) OVER 50u"/1.27u Ni		
–170	2x5		.400/10,160	.675/17,15	120u"~200u"/3.04um~5.08umTIN/LEAD	A	NOTE 16,19
–171	2x7		.600/15,240	.105/ 2,67	30u"/0.76u MIN (NOTE 17) OVER 50u"/1.27u Ni	C	
–172				.105/ 2,67	120u"~200u"/3.04um~5.08umTIN/LEAD		NOTE 16,19
–173				.150/ 3,81	30u"/0.76u MIN (NOTE 17) OVER 50u"/1.27u Ni		
–174				.150/ 3,81	120u"~200u"/3.04um~5.08umTIN/LEAD		NOTE 16,19
–175				.675/17,15	30u"/0.76u MIN (NOTE 17) OVER 50u"/1.27u Ni		
–176	2x7		.600/15,240	.675/17,15	120u"~200u"/3.04um~5.08umTIN/LEAD	C	NOTE 16,19
–177	2x8		.700/17,780	.105/ 2,67	30u"/0.76u MIN (NOTE 17) OVER 50u"/1.27u Ni	D	
–178	2x8		.700/17,780	.105/ 2,67	120u"~200u"/3.04um~5.08umTIN/LEAD	D	NOTE 16,19
–179	2x8		.700/17,780	.150/ 3,81	30u"/0.76u MIN (NOTE 17) OVER 50u"/1.27u Ni	D	
65863–180	2x8	LP	.700/17,780	.150/ 3,81	120u"~200u"/3.04um~5.08umTIN/LEAD	D	NOTE 16,19

mat'l. code		surface ISO 1302	tolerance ISO 406 ISO 1101	projection	product family QUICKIE
ltr ecn no dr date		tolerances unless otherwise specified			title
BE	angles	linear	.XX±.01/.X±0.3	INCH/MM	HEADER, QUICKIE SEA–HORSE, VERTICAL
	0°±2°		.XXX±.005/.XX±0.13		
			.XXXX±.0020/.XXX±0.051	scale 1:1	
	dr	M. CORNMAN	8/21/90		dwg no 65863 sheet 7 of 23 size A3
	engr	M. SMYK	8/21/90		
	chr	M. SMYK	8/21/90		
	appd	M. SMYK	8/21/90		type Product Customer Drawing
sheet index	revision sheet				

Copyright FCI

FCIconnect.com

form: A3

PRODUCT NO NOTE 12,13	SIZE	LATCH NOTE 8	DIM B	DIM D	TERMINAL PLATING	STYLE	
65863–181	2x8	LP	.700/17,780	.675/17,15	30u"/0.76u MIN (NOTE 17) OVER 50u"/1.27u Ni	D	
–182	2x8		.700/17,780	.675/17,15	120u"~200u"/3.04um~5.08umTIN/LEAD		NOTE 16,19
–183	2x10		.900/22,860	.105/ 2,67	30u"/0.76u MIN (NOTE 17) OVER 50u"/1.27u Ni		
–184				.105/ 2,67	120u"~200u"/3.04um~5.08umTIN/LEAD		NOTE 16,19
–185				.150/ 3,81	30u"/0.76u MIN (NOTE 17) OVER 50u"/1.27u Ni		
–186				.150/ 3,81	120u"~200u"/3.04um~5.08umTIN/LEAD		NOTE 16,19
–187				.675/17,15	30u"/0.76u MIN (NOTE 17) OVER 50u"/1.27u Ni		
–188	2x10		.900/22,860	.675/17,15	120u"~200u"/3.04um~5.08umTIN/LEAD		NOTE 16,19
–189	2x13		1.200/30,480	.105/ 2,67	30u"/0.76u MIN (NOTE 17) OVER 50u"/1.27u Ni		
–190				.105/ 2,67	120u"~200u"/3.04um~5.08umTIN/LEAD		NOTE 16,19
–191				.150/ 3,81	30u"/0.76u MIN (NOTE 17) OVER 50u"/1.27u Ni		
–192				.150/ 3,81	120u"~200u"/3.04um~5.08umTIN/LEAD		NOTE 16,19
–193				.675/17,15	30u"/0.76u MIN (NOTE 17) OVER 50u"/1.27u Ni		
–194	2x13		1.200/30,480	.675/17,15	120u"~200u"/3.04um~5.08umTIN/LEAD		NOTE 16,19
–195	2x17		1.600/40,640	.105/ 2,67	30u"/0.76u MIN (NOTE 17) OVER 50u"/1.27u Ni		
–196				.105/ 2,67	120u"~200u"/3.04um~5.08umTIN/LEAD		NOTE 16,19
–197				.150/ 3,81	30u"/0.76u MIN (NOTE 17) OVER 50u"/1.27u Ni		
–198				.150/ 3,81	120u"~200u"/3.04um~5.08umTIN/LEAD		NOTE 16,19
–199				.675/17,15	30u"/0.76u MIN (NOTE 17) OVER 50u"/1.27u Ni		
–200	2x17		1.600/40,640	.675/17,15	120u"~200u"/3.04um~5.08umTIN/LEAD		NOTE 16,19
–201	2x20		1.900/48,260	.105/ 2,67	30u"/0.76u MIN (NOTE 17) OVER 50u"/1.27u Ni		
–202				.105/ 2,67	120u"~200u"/3.04um~5.08umTIN/LEAD		NOTE 16,19
–203				.150/ 3,81	30u"/0.76u MIN (NOTE 17) OVER 50u"/1.27u Ni		
–204				.150/ 3,81	120u"~200u"/3.04um~5.08umTIN/LEAD		NOTE 16,19
–205				.675/17,15	30u"/0.76u MIN (NOTE 17) OVER 50u"/1.27u Ni		
–206	2x20		1.900/48,260	.675/17,15	120u"~200u"/3.04um~5.08umTIN/LEAD		NOTE 16,19
–207	2x25		2.400/60,960	.105/ 2,67	30u"/0.76u MIN (NOTE 17) OVER 50u"/1.27u Ni		
–208				.105/ 2,67	120u"~200u"/3.04um~5.08umTIN/LEAD		NOTE 16,19
–209				.150/ 3,81	30u"/0.76u MIN (NOTE 17) OVER 50u"/1.27u Ni		
–210				.150/ 3,81	120u"~200u"/3.04um~5.08umTIN/LEAD		NOTE 16,19
–211				.675/17,15	30u"/0.76u MIN (NOTE 17) OVER 50u"/1.27u Ni		
–212	2x25		2.400/60,960	.675/17,15	120u"~200u"/3.04um~5.08umTIN/LEAD		NOTE 16,19
–213	2x30		2.900/73,660	.105/ 2,67	30u"/0.76u MIN (NOTE 17) OVER 50u"/1.27u Ni		
–214	2x30		2.900/73,660	.105/ 2,67	120u"~200u"/3.04um~5.08umTIN/LEAD		NOTE 16,19
–215	2x30		2.900/73,660	.150/ 3,81	30u"/0.76u MIN (NOTE 17) OVER 50u"/1.27u Ni		
65863–216	2x30	LP	2.900/73,660	.150/ 3,81	120u"~200u"/3.04um~5.08umTIN/LEAD	D	NOTE 16,19

mat'l. code	surface ISO 1302	tolerance ISO 406 ISO 1101	projection
ltr / ecn no / dr / date	tolerances unless otherwise specified		
BE	angles 0°±2°	linear .XX±.01/.X±0.3; .XXX±.005/.XX±0.13; .XXXX±.0020/.XXX±0.051	INCH/MM
			scale 1:1
	dr M. CORNMAN 8/21/90		
	engr M. SMYK 8/21/90		
	chr M. SMYK 8/21/90		
	appd M. SMYK 8/21/90		
sheet index / revision sheet			

product family: QUICKIE

title: HEADER, QUICKIE SEA–HORSE, VERTICAL

dwg no: 65863 sheet 8 of 23 size A3

type: Product Customer Drawing

Copyright FCI

FCIconnect.com

PRODUCT NO NOTES 12,13	SIZE	LATCH NOTE 8	DIM B	DIM D	TERMINAL PLATING	STYLE
65863-217	2x30	LP	2.900/73,660	.675/17,15	30u"/0.76u MIN (NOTE 17) OVER 50u"/1.27u Ni	D
-218	2x30		2.900/73,660	.675/17,15	120u"~200u"/3.04um~5.08umTIN/LEAD	D
-219	2x5		.400/10,160	.105/ 2,67	30u"/0.76u MIN (NOTE 17) OVER 50u"/1.27u Ni	A
-220	2x7		.600/15,240			C
-221	2x8		.700/17,780			D
-222	2x10		.900/22,860			
-223	2x13		1.200/30,480			
-224	2x17		1.600/40,640			
-225	2x20		1.900/48,260			
-226	2x25		2.400/60,960			
-227	2x30		2.900/73,660	.105/ 2,67		
-228	2x20		1.900/48,260	.150/ 3,81		D
-229	2x5		.400/10,160			A
-230	2x7		.600/15,240			C
-231	2x8		.700/17,780			D
-232	2x10		.900/22,860			
-233	2x13		1.200/30,480			
-234	2x17		1.600/40,640			
-235	2x20		1.900/48,260			
-236	2x25		2.400/60,960			
-237	2x30		2.900/73,660	.150/ 3,81	30u"/0.76u MIN (NOTE 17) OVER 50u"/1.27u Ni	D
-238	2x5		.400/10,160	.675/17,15	15u"/0.38u MIN (NOTE 17) OVER 50u"/1.27u Ni	A
-239	2x7		.600/15,240			C
-240	2x8		.700/17,780			D
-241	2x10		.900/22,860			
-242	2x13		1.200/30,480			
-243	2x17		1.600/40,640			
-244	2x20		1.900/48,260			
-245	2x25		2.400/60,960			
-246	2x30	LP	2.900/73,660	.675/17,15	15u"/0.38u MIN (NOTE 17) OVER 50u"/1.27u Ni	D
-247	2x5	NO	.400/10,160	.105/ 2,67	30u"/0.76u MIN (NOTE 17) OVER 50u"/1.27u Ni	A
-248	2x7		.600/15,240			C
-249	2x8		.700/17,780			D
-250	2x10		.900/22,860			D
-251	2x13		1.200/30,480			D
65863-252	2x17	NO	1.600/40,640	.105/ 2,67	30u"/0.76u MIN (NOTE 17) OVER 50u"/1.27u Ni	D

NOTE 16,19

mat'l. code			surface ISO 1302 √	tolerance ISO 406 ISO 1101	projection
ltr	ecn no	dr	date	tolerances unless otherwise specified	
BE				angles / linear	.XX±.01/.X±0.3	INCH/MM
					.XXX±.005/.XX±0.13	
				0°±2°	.XXXX±.0020/.XXX±0.051	scale 1:1
				dr	M. CORNMAN	8/21/90
				engr	M. SMYK	8/21/90
				chr	M. SMYK	8/21/90
				appd	M. SMYK	8/21/90
sheet index	revision sheet					

product family: QUICKIE

title: HEADER, QUICKIE SEA-HORSE, VERTICAL

dwg no: 65863 sheet 9 of 23 size A3

type: Product Customer Drawing

Copyright FCI

FCIconnect.com

PRODUCT NO NOTE 12,13	SIZE	LATCH NOTE 8	DIM B	DIM D	TERMINAL PLATING	STYLE
65863-253	2x20	NO	1.900/48,260	.105/ 2,67	30u"/0.76u MIN (NOTE 17) OVER 50u"/1.27u Ni	D
-254	2x25		2.400/60,960	.105/ 2,67		D
-255	2x30		2.900/73,660	.105/ 2,67		D
-256	2x5		.400/10,160	.675/17,15		A
-257	2x7		.600/15,240			C
-258	2x8		.700/17,780			D
-259	2x10		.900/22,860			
-260	2x13		1.200/30,480			
-261	2x17		1.600/40,640			
-262	2x20		1.900/48,260			
-263	2x25		2.400/60,960			
-264	2x30	NO	2.900/73,660	.675/17,15		D
-265	2x5	STD	.400/10,160	.105/ 2,67		A
-266	2x7		.600/15,240			C
-267	2x8		.700/17,780			D
-268	2x10		.900/22,860			
-269	2x13		1.200/30,480			
-270	2x17		1.600/40,640			
-271	2x20		1.900/48,260			
-272	2x25		2.400/60,960			
-273	2x30		2.900/73,660	.105/ 2,67		D
-274	2x5		.400/10,160	.675/17,15		A
-275	2x7		.600/15,240			C
-276	2x8		.700/17,780			D
-277	2x10		.900/22,860			
-278	2x13		1.200/30,480			
-279	2x17		1.600/40,640			
-280	2x20		1.900/48,260			
-281	2x25		2.400/60,960			
-282	2x30	STD	2.900/73,660	.675/17,15		D
-283	2x5	LP	.400/10,160	.105/ 2,67		A
-284	2x7		.600/15,240			C
-285	2x8		.700/17,780			D
-286	2x10		.900/22,860			D
-287	2x13		1.200/30,480			D
65863-288	2x17	LP	1.600/40,640	.105/ 2,67	30u"/0.76u MIN (NOTE 17) OVER 50u"/1.27u Ni	D

FCIconnect.com

Copyright FCI

mat'l. code				surface ISO 1302 ✓	tolerance ISO 406 ISO 1101	projection
ltr	ecn no	dr	date	tolerances unless otherwise specified		
BE				angles	linear	.XX±.01/.X±0.3
						.XXX±.005/.XX±0.13
				0°±2°		.XXXX±.0020/.XXX±0.051
				dr	M. CORNMAN	8/21/90
				engr	M. SMYK	8/21/90
				chr	M. SMYK	8/21/90
				appd	M. SMYK	8/21/90
sheet index	revision sheet					

INCH/MM

scale 1:1

FCI

product family: QUICKIE

title: HEADER, QUICKIE SEA-HORSE, VERTICAL

dwg no: 65863 sheet 10 of 22 size A3

type: Product Customer Drawing

form: A3

PDS: Rev :BE STATUS: Released Printed: Jun 19, 2014

PRODUCT NO NOTE 12,13	SIZE	LATCH NOTE 8	DIM B	DIM D	TERMINAL PLATING	STYLE
65863-289	2x20	LP	1.900/48,260	.105/ 2,67	30u"/0.76u MIN (NOTE 17) OVER 50u"/1.27u Ni	D
-290	2x25		2.400/60,960	.105/ 2,67		D
-291	2x30		2.900/73,660	.105/ 2,67		D
-292	2x5		.400/10,160	.675/17,15		A
-293	2x7		.600/15,240			C
-294	2x8		.700/17,780			D
-295	2x10		.900/22,860			
-296	2x13		1.200/30,480			
-297	2x17		1.600/40,640			
-298	2x20		1.900/48,260			
-299	2x25		2.400/60,960			
-300	2x30	LP	2.900/73,660	.675/17,15	30u"/0.76u MIN (NOTE 17) OVER 50u"/1.27u Ni	D
-301	2x5	NO	.400/10,160	.105/ 2,67	15u"/0.38u MIN (NOTE 17) OVER 50u"/1.27u Ni	A
-302	2x7		.600/15,240			C
-303	2x8		.700/17,780			D
-304	2x10		.900/22,860			
-305	2x13		1.200/30,480			
-306	2x17		1.600/40,640			
-307	2x20		1.900/48,260			
-308	2x25		2.400/60,960			
-309	2x30		2.900/73,660	.105/ 2,67		D
-310	2x5		.400/10,160	.150/ 3,81		A
-311	2x7		.600/15,240			C
-312	2x8		.700/17,780			D
-313	2x10		.900/22,860			
-314	2x13		1.200/30,480			
-315	2x17		1.600/40,640			
-316	2x20		1.900/48,260			
-317	2x25		2.400/60,960			
-318	2x30	NO	2.900/73,660	.150/ 3,81		D
-319	2x5	STD	.400/10,160	.105/ 2,67		A
-320	2x7		.600/15,240			C
-321	2x8		.700/17,780			D
-322	2x10		.900/22,860			D
-323	2x13		1.200/30,480			D
65863-324	2x17	STD	1.600/40,640	.105/ 2,67	15u"/0.38u MIN (NOTE 17) OVER 50u"/1.27u Ni	D

FCIconnect.com
Copyright FCI

mat'l. code				surface ISO 1302 √	tolerance ISO 406 ISO 1101	projection
ltr	ecn no	dr	date	tolerances unless otherwise specified		
BE				angles	linear .XX±.01/.X±0.3	INCH/MM
					.XXX±.005/.XX±0.13	
				0°±2°	.XXXX±.0020/.XXX±0.051	scale 1:1
				dr	M. CORNMAN	8/21/90
				engr	M. SMYK	8/21/90
				chr	M. SMYK	8/21/90
				appd	M. SMYK	8/21/90
sheet index	revision sheet					

product family: QUICKIE

title: HEADER, QUICKIE SEA-HORSE, VERTICAL

dwg no: 65863 sheet11 of23 size A3

type: Product Customer Drawing

form: A3

PRODUCT NO NOTE 12,13	SIZE	LATCH NOTE 8	DIM B	DIM D	TERMINAL PLATING	STYLE	
65863-325	2x20	STD	1.900/48,260	.105/ 2,67	15u"/0.38u MIN (NOTE 17) OVER 50u"/1.27u Ni	D	
-326	2x25		2.400/60,960	.105/ 2,67		D	
-327	2x30		2.900/73,660	.105/ 2,67		D	
-328	2x5		.400/10,160	.150/ 3,81		A	
-329	2x7		.600/15,240			C	
-330	2x8		.700/17,780			D	
-331	2x10		.900/22,860				
-332	2x13		1.200/30,480				
-333	2x17		1.600/40,640				
-334	2x20		1.900/48,260				
-335	2x25		2.400/60,960				
-336	2x30	STD	2.900/73,660	.150/ 3,81		D	
-337	2x5	LP	.400/10,160	.105/ 2,67		A	
-338	2x7		.600/15,240			C	
-339	2x8		.700/17,780			D	
-340	2x10		.900/22,860				
-341	2x13		1.200/30,480				
-342	2x17		1.600/40,640				
-343	2x20		1.900/48,260				
-344	2x25		2.400/60,960				
-345	2x30		2.900/73,660	.105/ 2,67		D	
-346	2x5		.400/10,160	.150/ 3,81		A	
-347	2x7		.600/15,240			C	
-348	2x8		.700/17,780			D	
-349	2x10		.900/22,860				
-350	2x13		1.200/30,480				
-351	2x17		1.600/40,640				
-352	2x20		1.900/48,260				
-353	2x25		2.400/60,960				
-354	2x30	LP	2.900/73,660	.150/ 3,81	15u"/0.38u MIN (NOTE 17) OVER 50u"/1.27u Ni	D	
-355	2x5	NO	.400/10,160	.105/ 2,67	30u"/0.76u MIN (NOTE 17) OVER 50u"/1.27u Ni	B	
-356		NO			15u"/0.38u MIN (NOTE 17) OVER 50u"/1.27u Ni		
-357		NO			30u"/0.76u MIN (NOTE 17) OVER 50u"/1.27u Ni		
-358		NO			120u''~200u''/3.04um~5.08umTIN/LEAD		NOTE 16,19
-359		STD			30u"/0.76u MIN (NOTE 17) OVER 50u"/1.27u Ni		
65863-360	2x5	STD	.400/10,160	.105/ 2,67	15u"/0.38u MIN (NOTE 17) OVER 50u"/1.27u Ni	B	

mat'l. code			surface ISO 1302 √	tolerance ISO 406 ISO 1101	projection
ltr	ecn no	dr	date	tolerances unless otherwise specified	
BE				angles	linear: .XX±.01/.X±0.3; .XXX±.005/.XX±0.13; .XXXX±.0020/.XXX±0.051
				0°±2°	
				dr	M. CORNMAN 8/21/90
				engr	M. SMYK 8/21/90
				chr	M. SMYK 8/21/90
				appd	M. SMYK 8/21/90
sheet index	revision sheet				

INCH/MM

scale 1:1

product family: QUICKIE

title: HEADER, QUICKIE SEA-HORSE, VERTICAL

dwg no: 65863 sheet 12 of 23 size A3

type: Product Customer Drawing

FCIconnect.com

Copyright FCI

PRODUCT NO NOTE 12,13	SIZE	LATCH NOTE 8	DIM B	DIM D	TERMINAL PLATING	STYLE	
65863-361	2x5	STD	.400/10,160	.105/ 2,67	30u"/0.76u MIN (NOTE 17) OVER 50u"/1.27u Ni	B	
-362		STD			120u-200u"/3.04u-5.08u TIN/LEAD		NOTE 16,19
-363		LP			30u"/0.76u MIN (NOTE 17) OVER 50u"/1.27u Ni		
-364		LP			15u"/0.38u MIN (NOTE 17) OVER 50u"/1.27u Ni		
-365		LP			30u"/0.76u MIN (NOTE 17) OVER 50u"/1.27u Ni		
-366		LP		.105/ 2,67	120u-200u"/3.04u-5.08u TIN/LEAD		NOTE 16,19
-367		NO		.150/ 3,81	30u"/0.76u MIN (NOTE 17) OVER 50u"/1.27u Ni		
-368		NO			15u"/0.38u MIN (NOTE 17) OVER 50u"/1.27u Ni		
-369		NO			30u"/0.76u MIN (NOTE 17) OVER 50u"/1.27u Ni		
-370		NO			120u-200u"/3.04u-5.08u TIN/LEAD		NOTE 16,19
-371		STD			30u"/0.76u MIN (NOTE 17) OVER 50u"/1.27u Ni		
-372		STD			15u"/0.38u MIN (NOTE 17) OVER 50u"/1.27u Ni		
-373		STD			30u"/0.76u MIN (NOTE 17) OVER 50u"/1.27u Ni		
-374		STD			120u-200u"/3.04u-5.08u TIN/LEAD		NOTE 16,19
-375		LP			30u"/0.76u MIN (NOTE 17) OVER 50u"/1.27u Ni		
-376		LP			15u"/0.38u MIN (NOTE 17) OVER 50u"/1.27u Ni		
-377		LP			30u"/0.76u MIN (NOTE 17) OVER 50u"/1.27u Ni		
-378		LP		.150/ 3,81	120u-200u"/3.04u-5.08u TIN/LEAD		NOTE 16,19
-379		NO		.675/17,15	30u"/0.76u MIN (NOTE 17) OVER 50u"/1.27u Ni		
-380		NO			15u"/0.38u MIN (NOTE 17) OVER 50u"/1.27u Ni		
-381		NO			30u"/0.76u MIN (NOTE 17) OVER 50u"/1.27u Ni		
-382		NO			120u-200u"/3.04u-5.08u TIN/LEAD		NOTE 16,19
-383		STD			30u"/0.76u MIN (NOTE 17) OVER 50u"/1.27u Ni		
-384		STD			15u"/0.38u MIN (NOTE 17) OVER 50u"/1.27u Ni		
-385		STD			30u"/0.76u MIN (NOTE 17) OVER 50u"/1.27u Ni		
-386		STD			120u-200u"/3.04u-5.08u TIN/LEAD		NOTE 16,19
-387		LP			30u"/0.76u MIN (NOTE 17) OVER 50u"/1.27u Ni		
-388		LP			15u"/0.38u MIN (NOTE 17) OVER 50u"/1.27u Ni		
-389		LP			30u"/0.76u MIN (NOTE 17) OVER 50u"/1.27u Ni		
-390	2x5	LP	.400/10,160	.675/17,15	120u-200u"/3.04u-5.08u TIN/LEAD	B	NOTE 16,19
-391	2x9	STD	.800/20,320	.105/ 2,67	30u"/0.76u MIN (NOTE 17) OVER 50u"/1.27u Ni	D	
-392	2x9	NO	.800/20,320	.105/ 2,67	30u"/0.76u MIN (NOTE 17) OVER 50u"/1.27u Ni	D	
-393	2x9	LP	.800/20,320	.105/ 2,67	30u"/0.76u MIN (NOTE 17) OVER 50u"/1.27u Ni	D	
-394	2x5	NO	.400/10.160	.105/ 2,67	15u"/0.38u MIN (NOTE 17) OVER 50u"/1.27u Ni	A	
65863-395	2x5	STD	.400/10.160	.105/ 2,67	15u"/0.38u MIN (NOTE 17) OVER 50u"/1.27u Ni	A	

FCIconnect.com

Copyright FCI

mat'l. code				surface ISO 1302	tolerance ISO 406 ISO 1101	projection	product family QUICKIE
ltr	ecn no	dr	date	tolerances unless otherwise specified			title
BE				angles	linear .XX±.01/.X±0.3	INCH/MM	HEADER, QUICKIE SEA-HORSE, VERTICAL
					.XXX±.005/.XX±0.13		
				0°±2°	.XXXX±.0020/.XXX±0.051	scale 1:1	
				dr	M. CORNMAN 8/21/90		dwg no 65863 sheet 13 of 23 size A3
				engr	M. SMYK 8/21/90		
				chr	M. SMYK 8/21/90		
				appd	M. SMYK 8/21/90		type Product Customer Drawing
sheet index	revision sheet						

form: A3

PRODUCT NO NOTE 12,13	SIZE	LATCH NOTE 8	DIM B	DIM D	TERMINAL PLATING	STYLE
65863-396	2x5	LP	.400/10,160	.105/ 2,67	15u"/0.38u MIN (NOTE 17) OVER 50u"/1.27u Ni	A
-397		NO		.150/ 3,81		
-398		STD		.150/ 3,81		
-399		LP		.150/ 3,81		A
-400		NO		.105/ 2,67		B
-401		STD		.105/ 2,67		
-402		LP		.105/ 2,67		
-403		NO		.150/ 3,81		
-404		STD		.150/ 3,81		
-405	2x5	LP	.400/10,160	.150/ 3,81		B
-406	2x7	NO	.600/15.240	.105/ 2,67		C
-407		STD		.105/ 2,67		
-408		LP		.105/ 2,67		
-409		NO		.150/ 3,81		
-410		STD		.150/ 3,81		
-411	2x7	LP	.600/15.240	.150/ 3,81		C
-412	2x8	NO	.700/17.780	.105/ 2,67		D
-413		STD		.105/ 2,67		
-414		LP		.105/ 2,67		
-415		NO		.150/ 3,81		
-416		STD		.150/ 3,81		
-417	2x8	LP	.700/17.780	.150/ 3,81		
-418	2x10	NO	.900/22.860	.105/ 2,67		
-419		STD		.105/ 2,67		
-420		LP		.105/ 2,67		
-421		NO		.150/ 3,81		
-422		STD		.150/ 3,81		
-423	2x10	LP	.900/22.860	.150/ 3,81		
-424	2x13	NO	1.200/30.480	.105/ 2,67		
-425		STD		.105/ 2,67		
-426		LP		.105/ 2,67		
-427		NO		.150/ 3,81		
-428		STD		.150/ 3,81		
-429	2x13	LP	1.200/30.480	.150/ 3,81		
65863-430	2x17	NO	1.600/40.640	.105/ 2,67	15u"/0.38u MIN (NOTE 17) OVER 50u"/1.27u Ni	D

FCIconnect.com

Copyright FCI

mat'l. code			surface ISO 1302 √	tolerance ISO 406 ISO 1101	projection
ltr	ecn no	dr	date	tolerances unless otherwise specified	
BE				angles: 0°±2°; linear: .XX±.01/.X±0.3; .XXX±.005/.XX±0.13; .XXXX±.0020/.XXX±0.051	INCH/MM
					scale 1:1
				dr M. CORNMAN 8/21/90	
				engr M. SMYK 8/21/90	
				chr M. SMYK 8/21/90	
				appd M. SMYK 8/21/90	
sheet index	revision sheet				

product family: QUICKIE

title: HEADER, QUICKIE SEA-HORSE, VERTICAL

dwg no: 65863 sheet 14 of 23 size A3

type: Product Customer Drawing

form: A3

PRODUCT NO NOTES 12,13	SIZE	LATCH NOTE 8	DIM B	DIM D	TERMINAL PLATING	PIN STYLE	MISSING	
65863-431	2x17	STD	1.600/40.640	.105/ 2,67	15u"/0.38u MIN (NOTE 17) OVER 50u"/1.27u Ni	D	NONE	
-432		LP		.105/ 2,67				
-433		NO		.150/ 3,81				
-434		STD		.150/ 3,81				
-435	2x17	LP	1.600/40.640	.150/ 3,81				
-436	2x20	NO	1.900/48.260	.105/ 2,67				
-437		STD		.105/ 2,67				
-438		LP		.105/ 2,67				
-439		NO		.150/ 3,81				
-440		STD		.150/ 3,81				
-441	2x20	LP	1.900/48.260	.150/ 3,81				
-442	2x25	NO	2.400/60.960	.105/ 2,67				
-443		STD		.105/ 2,67				
-444		LP		.105/ 2,67				
-445		NO		.150/ 3,81				
-446		STD		.150/ 3,81				
-447	2x25	LP	2.400/60.960	.150/ 3,81				
-448	2x30	NO	2.900/73.660	.105/ 2,67				
-449		STD		.105/ 2,67				
-450		LP		.105/ 2,67				
-451		NO		.150/ 3,81				
-452		STD		.150/ 3,81				
-453	2x30	LP	2.900/73.660	.150/ 3,81				
-454	2x12	NO	1.100/27.940	.105/ 2,67				
-455	2x12	STD						
-456	2x12	LP						
-456S	2x12	LP			15u"/0.38u MIN (NOTE 17) OVER 50u"/1.27u Ni			NOTE 18
-457	2x12	NO			30u"/0.76u MIN (NOTE 17) OVER 50u"/1.27u Ni			
-458		STD			30u"/0.76u MIN (NOTE 17) OVER 50u"/1.27u Ni			
-459		LP			30u"/0.76u MIN (NOTE 17) OVER 50u"/1.27u Ni			
-460		NO			30u"/0.76u MIN (NOTE 17) OVER 50u"/1.27u Ni			
-461		STD			30u"/0.76u MIN (NOTE 17) OVER 50u"/1.27u Ni			
-462		LP			30u"/0.76u MIN (NOTE 17) OVER 50u"/1.27u Ni			
-463		NO			120u"-200u"/3.04u-5.08uTIN/LEAD			NOTE 16,19
-464		STD			120u"-200u"/3.04u-5.08uTIN/LEAD			NOTE 16,19
65863-465	2x12	LP	1.100/27.940	.105/ 2,67	120u"-200u"/3.04u-5.08uTIN/LEAD	D	NONE	NOTE 16,19

FCIconnect.com

Copyright FCI

mat'l. code				surface ISO 1302 ✓	tolerance ISO 406 ISO 1101	projection	product family QUICKIE
ltr	ecn no	dr	date	tolerances unless otherwise specified			title
BE				angles	linear .XX±.01/.X±0.3 / .XXX±.005/.XX±0.13 / .XXXX±.0020/.XXX±0.051	INCH/MM	HEADER, QUICKIE SEA-HORSE, VERTICAL
				0°±2°		scale 1:1	
				dr	M. CORNMAN	8/21/90	dwg no 65863 sheet 15 of 23 size A3
				engr	M. SMYK	8/21/90	
				chr	M. SMYK	8/21/90	
				appd	M. SMYK	8/21/90	type Product Customer Drawing
sheet index	revision sheet						

form: A3

PRODUCT NO NOTE 12,13	SIZE	LATCH NOTE 8	DIM B	DIM D	TERMINAL PLATING	STYLE	
65863-466	2x12	NO	1.100/27.940	.150/3.81	15u"/0.38u MIN (NOTE 17) OVER 50u"/1.27u Ni	D	
-467		STD			15u"/0.38u MIN (NOTE 17) OVER 50u"/1.27u Ni		
-468		LP			15u"/0.38u MIN (NOTE 17) OVER 50u"/1.27u Ni		
-469		NO			30u"/0.76u MIN (NOTE 17) OVER 50u"/1.27u Ni		
-470		STD			30u"/0.76u MIN (NOTE 17) OVER 50u"/1.27u Ni		
-471		LP			30u"/0.76u MIN (NOTE 17) OVER 50u"/1.27u Ni		
-472		NO			30u"/0.76u MIN (NOTE 17) OVER 50u"/1.27u Ni		
-473		STD			30u"/0.76u MIN (NOTE 17) OVER 50u"/1.27u Ni		
-474		LP			30u"/0.76u MIN (NOTE 17) OVER 50u"/1.27u Ni		
-475		NO			120u-200u"/3.04u-5.08u TIN/LEAD		NOTE 16,19
-476		STD			120u-200u"/3.04u-5.08u TIN/LEAD		NOTE 16,19
-477		LP		.150/3.81	120u-200u"/3.04u-5.08u TIN/LEAD		NOTE 16,19
-478		NO		.105/2.67	15u"/0.38u MIN (NOTE 17) OVER 50u"/1.27u Ni		
-479		STD			15u"/0.38u MIN (NOTE 17) OVER 50u"/1.27u Ni		
-480		LP			15u"/0.38u MIN (NOTE 17) OVER 50u"/1.27u Ni		
-481		NO			30u"/0.76u MIN (NOTE 17) OVER 50u"/1.27u Ni		
-482		STD			30u"/0.76u MIN (NOTE 17) OVER 50u"/1.27u Ni		
-483		LP		.105/2.67	30u"/0.76u MIN (NOTE 17) OVER 50u"/1.27u Ni		
-484		NO		.150/3.81	15u"/0.38u MIN (NOTE 17) OVER 50u"/1.27u Ni		
-485		STD		.150/3.81	15u"/0.38u MIN (NOTE 17) OVER 50u"/1.27u Ni		
-486		LP		.150/3.81	15u"/0.38u MIN (NOTE 17) OVER 50u"/1.27u Ni		
-487		NO		.675/17.15	15u"/0.38u MIN (NOTE 17) OVER 50u"/1.27u Ni		
-488		STD			15u"/0.38u MIN (NOTE 17) OVER 50u"/1.27u Ni		
-489		LP			15u"/0.38u MIN (NOTE 17) OVER 50u"/1.27u Ni		
-490		NO			30u"/0.76u MIN (NOTE 17) OVER 50u"/1.27u Ni		
-491		STD			30u"/0.76u MIN (NOTE 17) OVER 50u"/1.27u Ni		
-492		LP			30u"/0.76u MIN (NOTE 17) OVER 50u"/1.27u Ni		
-493		NO			30u"/0.76u MIN (NOTE 17) OVER 50u"/1.27u Ni		
-494		STD			30u"/0.76u MIN (NOTE 17) OVER 50u"/1.27u Ni		
-495		LP			30u"/0.76u MIN (NOTE 17) OVER 50u"/1.27u Ni		
-496		NO			120u-200u"/3.04u-5.08u TIN/LEAD		NOTE 16,19
-497		STD			120u-200u"/3.04u-5.08u TIN/LEAD		NOTE 16,19
-498	2x12	LP	1.100/27.940	.675/17.15	120u-200u"/3.04u-5.08u TIN/LEAD		NOTE 16,19
-499	2x15	NO	1.400/35.560	.105/2.67	15u"/0.38u MIN (NOTE 17) OVER 50u"/1.27u Ni		
65863-500	2x15	STD	1.400/35.560	.105/2.67	15u"/0.38u MIN (NOTE 17) OVER 50u"/1.27u Ni	D	

FCIconnect.com

Copyright FCI

mat'l. code				surface ISO 1302 ✓	tolerance ISO 406 ISO 1101
ltr	ecn no	dr	date	tolerances unless otherwise specified	
BE				angles	linear: .XX±.01/.X±0.3; .XXX±.005/.XX±0.13; .XXXX±.0020/.XXX±0.051
				0°±2°	
				dr	M. CORNMAN 8/21/90
				engr	M. SMYK 8/21/90
				chr	M. SMYK 8/21/90
				appd	M. SMYK 8/21/90
sheet index	revision sheet				

projection: INCH/MM; scale 1:1

product family: QUICKIE

title: HEADER, QUICKIE SEA-HORSE, VERTICAL

dwg no: 65863 sheet 16 of 23 size A3

type: Product Customer Drawing

form: A3

PRODUCT NO NOTE 12,13	SIZE	LATCH NOTE 8	DIM B	DIM D	TERMINAL PLATING	STYLE	
65863-501	2x15	LP	1.400/35.560	.105/2.67	15u"/0.38u MIN (NOTE 17) OVER 50u"/1.27u Ni	D	
-502		NO			30u"/0.76u MIN (NOTE 17) OVER 50u"/1.27u Ni		
-503		STD			30u"/0.76u MIN (NOTE 17) OVER 50u"/1.27u Ni		
-504		LP			30u"/0.76u MIN (NOTE 17) OVER 50u"/1.27u Ni		
-505		NO			30u"/0.76u MIN (NOTE 17) OVER 50u"/1.27u Ni		
-506		STD			30u"/0.76u MIN (NOTE 17) OVER 50u"/1.27u Ni		
-507		LP			30u"/0.76u MIN (NOTE 17) OVER 50u"/1.27u Ni		
-508		NO			120u-200u"/3.04u-5.08u TIN/LEAD		NOTE 16,19
-509		STD			120u-200u"/3.04u-5.08u TIN/LEAD		NOTE 16,19
-510		LP		.105/2.67	120u-200u"/3.04u-5.08u TIN/LEAD		NOTE 16,19
-511		NO		.150/3.81	15u"/0.38u MIN (NOTE 17) OVER 50u"/1.27u Ni		
-512		STD			15u"/0.38u MIN (NOTE 17) OVER 50u"/1.27u Ni		
-513		LP			15u"/0.38u MIN (NOTE 17) OVER 50u"/1.27u Ni		
-514		NO			30u"/0.76u MIN (NOTE 17) OVER 50u"/1.27u Ni		
-515		STD			30u"/0.76u MIN (NOTE 17) OVER 50u"/1.27u Ni		
-516		LP			30u"/0.76u MIN (NOTE 17) OVER 50u"/1.27u Ni		
-517		NO			30u"/0.76u MIN (NOTE 17) OVER 50u"/1.27u Ni		
-518		STD			30u"/0.76u MIN (NOTE 17) OVER 50u"/1.27u Ni		
-519		LP			30u"/0.76u MIN (NOTE 17) OVER 50u"/1.27u Ni		
-520		NO			120u-200u"/3.04u-5.08u TIN/LEAD		NOTE 16,19
-521		STD			120u-200u"/3.04u-5.08u TIN/LEAD		NOTE 16,19
-522		LP		.150/3.81	120u-200u"/3.04u-5.08u TIN/LEAD		NOTE 16,19
-523		NO		.105/2.67	15u"/0.38u MIN (NOTE 17) OVER 50u"/1.27u Ni		
-524		STD			15u"/0.38u MIN (NOTE 17) OVER 50u"/1.27u Ni		
-525		LP			15u"/0.38u MIN (NOTE 17) OVER 50u"/1.27u Ni		
-526		NO			30u"/0.76u MIN (NOTE 17) OVER 50u"/1.27u Ni		
-527		STD			30u"/0.76u MIN (NOTE 17) OVER 50u"/1.27u Ni		
-528		LP		.105/2.67	30u"/0.76u MIN (NOTE 17) OVER 50u"/1.27u Ni		
-529		NO		.150/3.81	15u"/0.38u MIN (NOTE 17) OVER 50u"/1.27u Ni		
-530		STD		.150/3.81	15u"/0.38u MIN (NOTE 17) OVER 50u"/1.27u Ni		
-531		LP		.150/3.81	15u"/0.38u MIN (NOTE 17) OVER 50u"/1.27u Ni		
-532		NO		.675/17.15	15u"/0.38u MIN (NOTE 17) OVER 50u"/1.27u Ni		
-533		STD			15u"/0.38u MIN (NOTE 17) OVER 50u"/1.27u Ni		
-534		LP			15u"/0.38u MIN (NOTE 17) OVER 50u"/1.27u Ni		
65863-535	2x15	NO	1.400/35.560	.675/17.15	30u"/0.76u MIN (NOTE 17) OVER 50u"/1.27u Ni	D	

mat'l. code		surface ISO 1302	tolerance ISO 406 ISO 1101	projection	product family QUICKIE
ltr ecn no dr date		tolerances unless otherwise specified			title
BE	angles	linear	.XX±.01/.X±0.3	INCH/MM	HEADER, QUICKIE SEA-HORSE, VERTICAL
			.XXX±.005/.XX±0.13		
	0°±2°		.XXXX±.0020/.XXX±0.051	scale 1:1	
	dr	M. CORNMAN	8/21/90		dwg no 65863 sheet 17 of 23 size A3
	engr	M. SMYK	8/21/90		
	chr	M. SMYK	8/21/90		
	appd	M. SMYK	8/21/90		type Product Customer Drawing
sheet index revision sheet					

FCIconnect.com
Copyright FCI

PRODUCT NO NOTE 12,13	SIZE	LATCH NOTE 8	DIM B	DIM D	TERMINAL PLATING	STYLE	
65863-536	2x15	STD	1.400/35.560	.675/17.15	30u"/0.76u MIN (NOTE 17) OVER 50u"/1.27u Ni	D	
-537		LP			30u"/0.76u MIN (NOTE 17) OVER 50u"/1.27u Ni		
-538		NO			30u"/0.76u MIN (NOTE 17) OVER 50u"/1.27u Ni		
-539		STD			30u"/0.76u MIN (NOTE 17) OVER 50u"/1.27u Ni		
-540		LP			30u"/0.76u MIN (NOTE 17) OVER 50u"/1.27u Ni		
-541		NO			120u-200u"/3.04u-5.08u TIN/LEAD		NOTE 16,19
-542		STD			120u-200u"/3.04u-5.08u TIN/LEAD		NOTE 16,19
-543	2x15	LP	1.400/35.560	.675/17.15	120u-200u"/3.04u-5.08u TIN/LEAD		NOTE 16,19
-544	2x22	NO	2.100/53.340	.105/2.67	15u"/0.38u MIN (NOTE 17) OVER 50u"/1.27u Ni		
-545		STD			15u"/0.38u MIN (NOTE 17) OVER 50u"/1.27u Ni		
-546		LP			15u"/0.38u MIN (NOTE 17) OVER 50u"/1.27u Ni		
-547		NO			30u"/0.76u MIN (NOTE 17) OVER 50u"/1.27u Ni		
-548		STD			30u"/0.76u MIN (NOTE 17) OVER 50u"/1.27u Ni		
-549		LP			30u"/0.76u MIN (NOTE 17) OVER 50u"/1.27u Ni		
-550		NO			30u"/0.76u MIN (NOTE 17) OVER 50u"/1.27u Ni		
-551		STD			30u"/0.76u MIN (NOTE 17) OVER 50u"/1.27u Ni		
-552		LP			30u"/0.76u MIN (NOTE 17) OVER 50u"/1.27u Ni		
-553		NO			120u-200u"/3.04u-5.08u TIN/LEAD		NOTE 16,19
-554		STD			120u-200u"/3.04u-5.08u TIN/LEAD		NOTE 16,19
-555		LP		.105/2.67	120u-200u"/3.04u-5.08u TIN/LEAD		NOTE 16,19
-556		NO		.150/3.81	15u"/0.38u MIN (NOTE 17) OVER 50u"/1.27u Ni		
-557		STD			15u"/0.38u MIN (NOTE 17) OVER 50u"/1.27u Ni		
-558		LP			15u"/0.38u MIN (NOTE 17) OVER 50u"/1.27u Ni		
-559		NO			30u"/0.76u MIN (NOTE 17) OVER 50u"/1.27u Ni		
-560		STD			30u"/0.76u MIN (NOTE 17) OVER 50u"/1.27u Ni		
-561		LP			30u"/0.76u MIN (NOTE 17) OVER 50u"/1.27u Ni		
-562		NO			30u"/0.76u MIN (NOTE 17) OVER 50u"/1.27u Ni		
-563		STD			30u"/0.76u MIN (NOTE 17) OVER 50u"/1.27u Ni		
-564		LP			30u"/0.76u MIN (NOTE 17) OVER 50u"/1.27u Ni		
-565		NO			120u-200u"/3.04u-5.08u TIN/LEAD		NOTE 16,19
-566		STD			120u-200u"/3.04u-5.08u TIN/LEAD		NOTE 16,19
-567		LP		.150/3.81	120u-200u"/3.04u-5.08u TIN/LEAD		NOTE 16,19
-568		NO		.105/2.67	15u"/0.38u MIN (NOTE 17) OVER 50u"/1.27u Ni		
-569		STD		.105/2.67	15u"/0.38u MIN (NOTE 17) OVER 50u"/1.27u Ni		
65863-570	2x22	LP	2.100/53.340	.105/2.67	15u"/0.38u MIN (NOTE 17) OVER 50u"/1.27u Ni	D	

FCIconnect.com

Copyright FCI

mat'l. code	surface ISO 1302	tolerance ISO 406 ISO 1101	projection
ltr / ecn no / dr / date	tolerances unless otherwise specified		
BE	angles 0°±2°	linear .XX±.01/.X±0.3; .XXX±.005/.XX±0.13; .XXXX±.0020/.XXX±0.051	INCH/MM
			scale 1:1
	dr	M. CORNMAN	8/21/90
	engr	M. SMYK	8/21/90
	chr	M. SMYK	8/21/90
	appd	M. SMYK	8/21/90
sheet index / revision sheet			

product family: QUICKIE

title: HEADER, QUICKIE SEA-HORSE, VERTICAL

dwg no: 65863 sheet 18 of 23 size A3

type: Product Customer Drawing

form: A3

PRODUCT NO NOTE 12,13	SIZE	LATCH NOTE 8	DIM B	DIM D	TERMINAL PLATING	STYLE	
65863-571	2x22	NO	2.100/53.340	.105/2.67	30u"/0.76u MIN (NOTE 17) OVER 50u"/1.27u Ni	D	
-572		STD		.105/2.67	30u"/0.76u MIN (NOTE 17) OVER 50u"/1.27u Ni		
-573		LP		.105/2.67	30u"/0.76u MIN (NOTE 17) OVER 50u"/1.27u Ni		
-574		NO		.150/3.81	15u"/0.38u MIN (NOTE 17) OVER 50u"/1.27u Ni		
-575		STD		.150/3.81	15u"/0.38u MIN (NOTE 17) OVER 50u"/1.27u Ni		
-576		LP		.150/3.81	15u"/0.38u MIN (NOTE 17) OVER 50u"/1.27u Ni		
-577		NO		.675/17.15	15u"/0.38u MIN (NOTE 17) OVER 50u"/1.27u Ni		
-578		STD			15u"/0.38u MIN (NOTE 17) OVER 50u"/1.27u Ni		
-579		LP			15u"/0.38u MIN (NOTE 17) OVER 50u"/1.27u Ni		
-580		NO			30u"/0.76u MIN (NOTE 17) OVER 50u"/1.27u Ni		
-581		STD			30u"/0.76u MIN (NOTE 17) OVER 50u"/1.27u Ni		
-582		LP			30u"/0.76u MIN (NOTE 17) OVER 50u"/1.27u Ni		
-583		NO			30u"/0.76u MIN (NOTE 17) OVER 50u"/1.27u Ni		
-584		STD			30u"/0.76u MIN (NOTE 17) OVER 50u"/1.27u Ni		
-585		LP			30u"/0.76u MIN (NOTE 17) OVER 50u"/1.27u Ni		
-586		NO			120u-200u"/3.04u-5.08u TIN/LEAD		NOTE 16,19
-587		STD			120u-200u"/3.04u-5.08u TIN/LEAD		NOTE 16,19
-588	2x22	LP	2.100/53.340	.675/17.15	120u-200u"/3.04u-5.08u TIN/LEAD		NOTE 16,19
-589	2x25	STD	2.400/60.960	.150/3.81	30u"/0.76u MIN (NOTE 17) OVER 50u"/1.27u Ni		
-590		66258		.105/2.67			
-591		66258		.150/3.81			
-592	2x25	NO	2.400/60.960		30u"/0.76u MIN (NOTE 17) OVER 50u"/1.27u Ni		
-593	2x13	LP	1.200/30.480		50u"/1.27u MIN (NOTE 17) OVER 50u"/1.27u Ni		
-594	2x13	NO	1.200/30.480	.150/3.81			
-595	2x10	NO	.900/22.860	.150/3.81			
-596	2x10	STD	.900/22.860	.150/3.81		D	
-597	2x5	LP	.400/10.160	.150/3.81		A	
-598	2x5	NO	.400/10.160	.150/3.81		A	
-599	2x5	LP	.400/10.160	.675/17.15		A	
-600	2x5	NO	.400/10.160	.675/17.15	50u"/1.27u MIN (NOTE 17) OVER 50u"/1.27u Ni	A	
-601	2X32	NO	3.100/78.740	.105/2.67	15u"/0.38u MIN (NOTE 17) OVER 50u"/1.27u Ni	D	
-602	2X32	STD	3.100/78.740	.105/2.67	15u"/0.38u MIN (NOTE 17) OVER 50u"/1.27u Ni	D	
-603	2X32	LP	3.100/78.740	.105/2.67	15u"/0.38u MIN (NOTE 17) OVER 50u"/1.27u Ni	D	
65863-604	2X32	NO	3.100/78.740	.105/2.67	30u"/0.76u MIN (NOTE 17) OVER 50u"/1.27u Ni	D	

FCIconnect.com

Copyright FCI

mat'l. code	surface ISO 1302 ✓	tolerance ISO 406 ISO 1101	projection
ltr ecn no dr date	tolerances unless otherwise specified		
BE	angles	linear .XX±.01/.X±0.3 / .XXX±.005/.XX±0.13 / .XXXX±.0020/.XXX±0.051	INCH/MM
	0°±2°		scale 1:1
	dr M. CORNMAN 8/21/90		
	engr M. SMYK 8/21/90		
	chr M. SMYK 8/21/90		
	appd M. SMYK 8/21/90		
sheet index / revision sheet			

product family: QUICKIE

title: HEADER, QUICKIE SEA-HORSE, VERTICAL

dwg no: 65863 sheet 19 of 23 size A3

type: Product Customer Drawing

form: A3

PRODUCT NO NOTE 12,13	SIZE	LATCH NOTE 8	DIM B	DIM D	TERMINAL PLATING	STYLE	
65863-605	2X32	STD	3.100/78.740	.105/2.67	30u"/0.76u MIN (NOTE 17) OVER 50u"/1.27u Ni	D	
-606		LP			30u"/0.76u MIN (NOTE 17) OVER 50u"/1.27u Ni		
-607		NO			30u"/0.76u MIN (NOTE 17) OVER 50u"/1.27u Ni		
-608		STD			30u"/0.76u MIN (NOTE 17) OVER 50u"/1.27u Ni		
-609		LP			30u"/0.76u MIN (NOTE 17) OVER 50u"/1.27u Ni		
-610		NO			120u-200u"/3.04u-5.08u TIN/LEAD		NOTE 16,19
-611		STD			120u-200u"/3.04u-5.08u TIN/LEAD		NOTE 16,19
-612	2X32	LP	3.100/78.740	.105/2.67	120u-200u"/3.04u-5.08u TIN/LEAD		NOTE 16,19
-613	2x20	NO	1.900/48.260	.105/ 2,67	30u"/0.76u MIN (NOTE 17) OVER 50u"/1.27u Ni		
-614	2x20	STD	1.900/48.260	.105/ 2,67	30u"/0.76u MIN (NOTE 17) OVER 50u"/1.27u Ni		
-615	2x20	LP	1.900/48.260	.105/ 2,67	30u"/0.76u MIN (NOTE 17) OVER 50u"/1.27u Ni		
-616	2x25	NO	2.400/60.960	.450/ 11,43	30u"/0.76u MIN (NOTE 17) OVER 50u"/1.27u Ni		
-617	2x17	NO	1.600/40.640	.150/ 3,81	50u"/1.27u MIN (NOTE 17) OVER 50u"/1.27u Ni		
-618	2x17	STD	1.600/40.640	.150/ 3,81	50u"/1.27u MIN (NOTE 17) OVER 50u"/1.27u Ni		
-619	2x17	LP	1.600/40.640	.150/ 3,81	50u"/1.27u MIN (NOTE 17) OVER 50u"/1.27u Ni		
-620	2X32	STD	3.100/78.740	.105/2.67	30u"/0.76u MIN (NOTE 17) OVER 50u"/1.27u Ni		
-621	2X32	NO	3.100/78.740				
-622	2x15	STD	1.400/35.560				
-623	2x15	NO	1.400/35.560				
-624	2x22	STD	2.100/53.340				
-625	2x22	NO	2.100/53.340	.105/2.67	30u"/0.76u MIN (NOTE 17) OVER 50u"/1.27u Ni		
-626	2x25	NO	2.400/60.960	.150/ 3,81	50u"/1.27u MIN (NOTE 17) OVER 50u"/1.27u Ni		
-627	2x25	STD	2.400/60.960				
-628	2x25	LP	2.400/60.960				
-629	2x20	NO	1.900/48.260				
-630	2x20	STD	1.900/48.260				
-631	2x20	LP	1.900/48.260	.150/ 3,81	50u"/1.27u MIN (NOTE 17) OVER 50u"/1.27u Ni		
-632	2x20	STD	1.900/48.260	.105/2.67	30u"/0.76u MIN (NOTE 17) OVER 50u"/1.27u Ni		
-633	2x8	STD	.700/17.78	.150/ 3,81	50u"/1.27u MIN (NOTE 17) OVER 50u"/1.27u Ni	D	
-634	2x7	NO	.600/15.24	.236/ 5.99	30u"/0.76u MIN (NOTE 17) OVER 50u"/1.27u Ni	C	
-635	2x5	STD	.400/10.16	.520/13.21	30u"/0.76u MIN (NOTE 17) OVER 50u"/1.27u Ni	A	
-636	2x8	NO	.700/17.78	.150/ 3,81	30u"/0.76u MIN (NOTE 17) OVER 50u"/1.27u Ni	D	
-637	2x8	STD	.700/17.78	.150/ 3,81	30u"/0.76u MIN (NOTE 17) OVER 50u"/1.27u Ni	D	
-638	2x10	NO	.800/20.32	.150/ 3,81	30u"/0.76u MIN (NOTE 17) OVER 50u"/1.27u Ni	D	
65863-639	2x10	STD	.800/20.32	.150/ 3,81	30u"/0.76u MIN (NOTE 17) OVER 50u"/1.27u Ni	D	CUSTOMER SPECIAL

ltr	ecn no	dr	date
BE			

mat'l. code

surface ISO 1302 √

tolerance ISO 406 ISO 1101

tolerances unless otherwise specified

angles 0°±2°

linear .XX±.01/.X±0.3; .XXX±.005/.XX±0.13; .XXXX±.0020/.XXX±0.051

projection

INCH/MM

scale 1:1

dr	M. CORNMAN	8/21/90
engr	M. SMYK	8/21/90
chr	M. SMYK	8/21/90
appd	M. SMYK	8/21/90

product family: QUICKIE

title: HEADER, QUICKIE SEA-HORSE, VERTICAL

dwg no: 65863 sheet 20 of 23 size A3

type: Product Customer Drawing

sheet index | revision sheet

form: A3

FCIconnect.com
Copyright FCI

PRODUCT NO NOTE 12,13	SIZE	LATCH NOTE 8	DIM B	DIM D	TERMINAL PLATING	STYLE	PIN MISSING	
65863–640	2x12	NO	1.100/ 27.94	.150/3,81	30u"/0.76u MIN (NOTE 17) OVER 50u"/1.27u Ni	D	NONE	
–641	2x12	STD	1.100/ 27.94					
–642	2x15	NO	1.400/ 35.56					
–643	2x15	STD	1.400/ 35.56					
–644	2x30	NO	2.900/ 73.66					
–645	2x30	STD	2.900/ 73.66					
–646	2x25	STD	2.400/ 60.96			D		
–647	2x5	STD	.400/ 10.16			A		
–648	2x7	STD	.600/ 15.24			C		
–649	2x13	STD	1.120/ 30.48			D		
–650	2x17	STD	1.600/ 40.64			D		
–651	2x5	NO	.400/ 10.16			A		
–652	2x7	NO	.600/ 15.24			C		
–653	2x13	NO	1.120/ 30.48			D		
–654	2x17	NO	1.600/ 40.64	.150/3,81		D		
–655	2x5	STD	.400/ 10.16	.175/4.45		A		
–656	2x7		.600/ 15.24			C		
–657	2x13		1.120/ 30.48			D		
–658	2x17	STD	1.600/ 40.64	.175/4.45		D		
–659	2x5	NO	.400/ 10.16	.250/6.35		A		
–660	2x7	LP	.600/ 15.24	.236/5.99	30u"/0.76u MIN (NOTE 17) OVER 50u"/1.27u Ni	C	NONE	
–715	2x8	LP	.700/ 17.78	.150/3.81	30u"/0.76u MIN (NOTE 17) OVER 50u"/1.27u Ni	D	3	
–716	2x8	LP	.700/ 17.78	.150/3.81	30u"/0.76u MIN (NOTE 17) OVER 50u"/1.27u Ni	D	14	
–717	2X20	LP	1.900/48.26	.150/3.81	30u"/0.76u MIN (NOTE 17) OVER 50u"/1.27u Ni	D	20	
–717S	2X20	LP	1.900/48.26	.150/3.81	30u"/0.76u MIN (NOTE 17) OVER 50u"/1.27u Ni	D	20	NOTE 18
–733	2x17	LP	1.600/ 40.14	.105/2.67	50u"/1.27u MIN (NOTE 17) OVER 50u"/1.27u Ni	D	5	
–734	2x17	STD	1.600/ 40.64	.105/2.67	50u"/1.27u MIN (NOTE 17) OVER 50u"/1.27u Ni	D	5	
–735	2x10	LP	.900/ 22.86	.150/3.81	30u"/0.76u MIN (NOTE 17) OVER 50u"/1.27u Ni	D	16	
–736	2x10	LP	.900/ 22.86		30u"/0.76u MIN (NOTE 17) OVER 50u"/1.27u Ni	D	19	
–737	2x5	LP	.400/ 10.16		30u"/0.76u MIN (NOTE 17) OVER 50u"/1.27u Ni	A	10	
–738	2X20	LP	1.900/48.26		30u"/0.76u MIN (NOTE 17) OVER 50u"/1.27u Ni	D	8	
–739	2X25	LP	2.400/60.96			D	25	
–740	2X12	LP	1.100/ 27.94			D	20	
–741	2X17	LP	1.600/ 40.64			D	5	
–741S	2X17	LP	1.600/ 40.64			D	5	NOTE 18
–742	2X5	LP	.400/ 10.16			A	2	
65863–743	2X17	LP	1.600/ 40.64	.150/3.81	30u"/0.76u MIN (NOTE 17) OVER 50u"/1.27u Ni	D	3	

mat'l. code		surface ISO 1302	tolerance ISO 406 ISO 1101	projection	product family QUICKIE
ltr / ecn no / dr / date		tolerances unless otherwise specified			title
BE		angles	linear	.XX±.01/.X±0.3	INCH/MM	HEADER, QUICKIE SEA–HORSE, VERTICAL
				.XXX±.005/.XX±0.13	
		0°±2°		.XXXX±.0020/.XXX±0.051	scale 1:1
		dr	M. CORNMAN	8/21/90	dwg no 65863 sheet21 of23 size A3
		engr	M. SMYK	8/21/90	
		chr	M. SMYK	8/21/90	
		appd	M. SMYK	8/21/90	type Product Customer Drawing
sheet index	revision sheet				

FCIconnect.com
Copyright FCI

PRODUCT NO NOTE 12,13	SIZE	LATCH NOTE 8	DIM B	DIM D	TERMINAL PLATING	STYLE	MISSING PIN	
65863–744	2x17	LP	1.600/ 40.64	.150/3.81	30u"/0.76u MIN (NOTE 17) OVER 50u"/1.27u Ni	D	3, 5	
65863–744S	2x17	LP	1.600/ 40.64	.150/3.81	30u"/0.76u MIN (NOTE 17) OVER 50u"/1.27u Ni	D	3, 5	NOTE 18
65863–843	2x5	N/A	.400/ 10.16	.120/3.05	15u"/0.38u MIN (NOTE 17) OVER 50u"/1.27u Ni	A		
–844	2x7		.600/ 15.24			C		
–845	2x10		.900/ 22.86			D		
–846	2x15		1.400/ 35.56					
–847	2x17		1.600/ 40.64					
–848	2X20		1.900/ 48.26					
–849	2X25		2.400/ 60.96					
–850	2x30	N/A	2.900/ 73.66			D		
–851	2x5	STD	.400/ 10.16			A		
–852	2x7		.600/ 15.24			C	N/A	
–853	2x10		.900/ 22.86			D		
–854	2x15		1.400/ 35.56					
–855	2x17		1.600/ 40.64					
–856	2X20		1.900/ 48.26					
–857	2X25		2.400/ 60.96					
–858	2x30	STD	2.900/ 73.66			D		
–859	2x5	L/P	.400/ 10.16			A		
–860	2x7		.600/ 15.24			C		
–861	2x10		.900/ 22.86			D		
–861S	2x10		.900/ 22.86			D		NOTE 18
–862	2x15		1.400/ 35.56					
–863	2x17		1.600/ 40.64					
–864	2X20		1.900/ 48.26					
–865	2X25		2.400/ 60.96					
65863–866	2x30	L/P	2.900/ 73.66	.120/3.05		D		
65863–867S	2x12	L/P	1.100/ 27.94	.105/2.67	15u"/0.38u MIN (NOTE 17) OVER 50u"/1.27u Ni	D	24	NOTE 18
65863–868S	2x12	L/P	1.100/ 27.94	.105/2.67	30u"/0.76u MIN (NOTE 17) OVER 50u"/1.27u Ni	D	24	NOTE 18

FCIconnect.com

Copyright FCI

mat'l. code				surface ISO 1302 √	tolerance ISO 406 ISO 1101	projection	product family QUICKIE
ltr	ecn no	dr	date	tolerances unless otherwise specified			title
BE				angles	linear	INCH/MM	HEADER, QUICKIE SEA–HORSE, VERTICAL
				0°±2°	.XX±.01/.X±0.3 .XXX±.005/.XX±0.13 .XXXX±.0020/.XXX±0.051	scale 1:1	
				dr	M. CORNMAN	8/21/90	dwg no 65863 sheet 22 of 23 size A3
				engr	M. SMYK	8/21/90	
				chr	M. SMYK	8/21/90	
				appd	M. SMYK	8/21/90	type Product Customer Drawing
sheet index	revision sheet						

form: A3

PRODUCT NO NOTE 12,13	SIZE	LATCH NOTE 8	DIM B	DIM D	TERMINAL PLATING	STYLE
65863-049P	2x5	STD	.400/10,160	.105/ 2,67	30u"/0.76u MIN (NOTE 17) OVER 50u"/1.27u Ni	A
65863-055P	2x7	STD	.600/15,240	.105/ 2,67	30u"/0.76u MIN (NOTE 17) OVER 50u"/1.27u Ni	C
65863-061P	2x8	STD	.700/17,780	.105/ 2,67	30u"/0.76u MIN (NOTE 17) OVER 50u"/1.27u Ni	D
65863-067P	2x10	STD	.900/22,860	.105/ 2,67	30u"/0.76u MIN (NOTE 17) OVER 50u"/1.27u Ni	D
65863-073P	2x13	STD	1.200/30,480	.105/ 2,67	30u"/0.76u MIN (NOTE 17) OVER 50u"/1.27u Ni	D
65863-079P	2x17	STD	1.600/40,640	.105/ 2,67	30u"/0.76u MIN (NOTE 17) OVER 50u"/1.27u Ni	D
65863-085P	2x20	STD	1.900/48,260	.105/ 2,67	30u"/0.76u MIN (NOTE 17) OVER 50u"/1.27u Ni	D
65863-091P	2x25	STD	2.400/60,960	.105/ 2,67	30u"/0.76u MIN (NOTE 17) OVER 50u"/1.27u Ni	D
65863-203P	2x20	LP	1.900/48,260	.105/ 2,67	30u"/0.76u MIN (NOTE 17) OVER 50u"/1.27u Ni	D
65863-079F	2x17	STD	1.600/40,640	.105/ 2,67	30u"/0.76u MIN (NOTE 17) OVER 50u"/1.27u Ni	D
65863-081F	2x17	STD	1.600/40,640	.150/ 3.81	30u"/0.76u MIN (NOTE 17) OVER 50u"/1.27u Ni	D

FCIconnect.com
Copyright FCI

mat'l. code				surface ISO 1302 ✓	tolerance ISO 406 ISO 1101	projection	product family QUICKIE
ltr	ecn no	dr	date	tolerances unless otherwise specified			title
BE				angles	linear .XX±.01/.X±0.3	INCH/MM	HEADER, QUICKIE SEA-HORSE, VERTICAL
					.XXX±.005/.XX±0.13		
				0°±2°	.XXXX±.0020/.XXX±0.051	scale 1:1	
				dr	M. CORNMAN 8/21/90	FCI	dwg no 65863 sheet 23 of 23 size A3
				engr	M. SMYK 8/21/90		
				chr	M. SMYK 8/21/90		
				appd	M. SMYK 8/21/90		type Product Customer Drawing
sheet index	revision sheet						

form: A3