THIS COPY IS PROVIDED ON A RESTRICTED BASIS AND IS NOT TO BE USED IN ANY WAY DETRIMENTAL TO THE INTERESTS OF PANDUIT CORP.

C

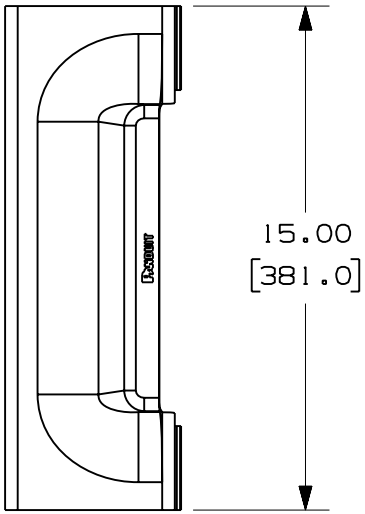

PANDUIT PART NUMBER	WEIGHT
FRSP4C	0.42 LB/EACH (192g/EACH)

F

G NOTES:

1. SEE CURRENT CATALOG FOR ADDITIONAL PART SUFFIXES TO INDICATE COLOR AND/OR PACKAGE QUANTITY.
2. DIMENSIONS IN PARENTHESES ARE IN METRIC.

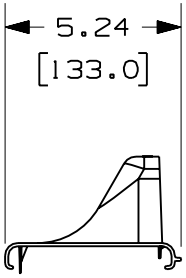

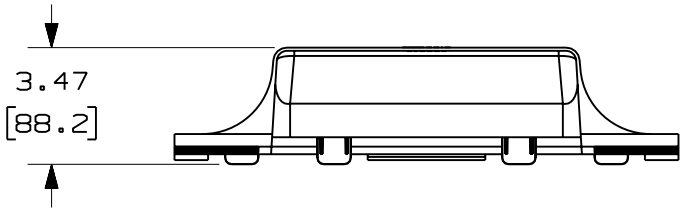

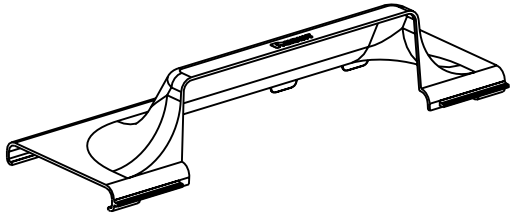

ENG. REF.: D37847CA_DC_FRSP4C_01.prt

CAD FILENAME/LAYERS E FRSP4C.pdf

PANDUIT CORP TINLEY PARK, ILLINOIS

FIBERRUNNER 4x4 SPILL-OVER JUNCTION WITH 2" EXIT HINGED COVER (FRSP4C)

D CUSTOMER DRAWING

UNLESS OTHERWISE SPECIFIED, DIMENSIONAL TOLERANCES ARE:
(.X) ± (.XXX) ±
(.XX) ±.03 (.8) ANGLES ±

UNLESS OTHERWISE SPECIFIED, ALL DIMENSIONS ARE GIVEN IN INCHES, THIRD ANGLE PROJECTION.

DRAWN BY JHNU
MAT'L: ABS
SCALE NONE
DATE 7-30-01
CHK'D DJWA
DRAWING NO. 37847-76
DWG A SIZE

REV	DATE	BY	CHK	DESCRIPTION	ECN	-	R	CUST	SUP	GMBH
-	--------	---	---	G. REVISED GENERAL NOTES	--------		--	--		
-	--------	---	---	F. REVISED PART WEIGHT E. REVISED CAD FILENAME	--------		--	--		
3	7-14-06	DTP	RN	D. REVISED DRAWING TITLE C. REVISED AND REDRAWN	37847-76		RN	RN		