MICRO SWITCH
FREEPORT, ILLINOIS, U.S.A.
A DIVISION OF HONEYWELL
FED. MFG. CODE 91929

SWITCH–ENCLOSED

CATALOG LISTING
BZE6-2RN5

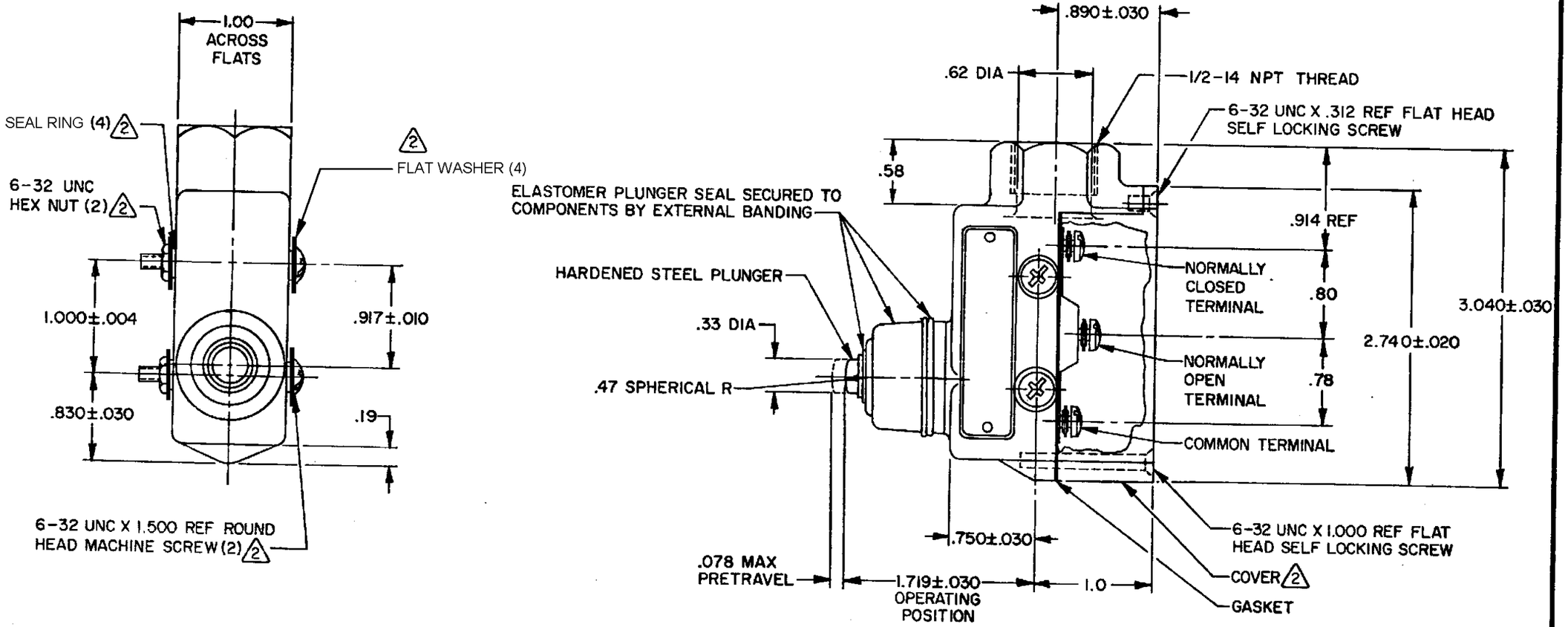

NOTES–

1 – 6-32 UNC X .219 REF BINDING HEAD TERMINAL SCREW AND WASHER (SEMS)(3)
2 FURNISHED UNASSEMBLED
3 – ALL PLASTIC PARTS ARE FUNGUS RESISTANT
4 - SEAL RATING: NEMA1,3
IP54

THIS DRAWING COVERS A PROPRIETARY ITEM AND IS THE PROPERTY OF MICRO SWITCH, A DIVISION OF HONEYWELL. THIS DRAWING IS NOT TO BE COPIED OR USED WITHOUT THE APPROVAL OF MICRO SWITCH.

CHARACTERISTICS	ELECTRICAL DATA	SCALE FULL
OPERATING FORCE — — — — — 15-39 OZ	CONTACT ARRANGEMENT S P D T	DO NOT SCALE PRINT
RELEASE FORCE — — — — — 10 OZ MIN	15A-125, 250 OR 480 VAC, 2A-600 VAC 1/8 HP-125 VAC; 1/4 HP-250 VAC 1/2 A-125 VDC; 1/4 A-250 VDC CODE L74	UNLESS OTHERWISE NOTED DIMENSIONS ARE IN INCHES
DIFFERENTIAL TRAVEL — — — .002 MAX		TOLERANCES ARE:
OVERTRAVEL — — — — — — — .219 MIN		ONE PLACE (.0) ±.030 TWO PLACE (.00) ±.015 THREE PLACE (.000) ±.005 ANGLES ±1°
BASIC SWITCH REPLACEMENT — BZ-2RQ6706T	CE 1.5A, 240Vac	WEIGHT .56 LB

DRAWN	WJM	25 FEB 80	
CHECK			
CHECK			
CHECK	