MATERIALS AND FINISHES

BODY: BRASS
PLATED TRI-METAL

CENTER CONTACT BERYLLIUM COPPER
PLATED GOLD

INSULATOR TEFLON

CRIMP TUBE, JAM NUT: BRASS
PLATED NICKEL

LOCKWASHER: PHOSPHER BRONZE
PLATED TRI-METAL

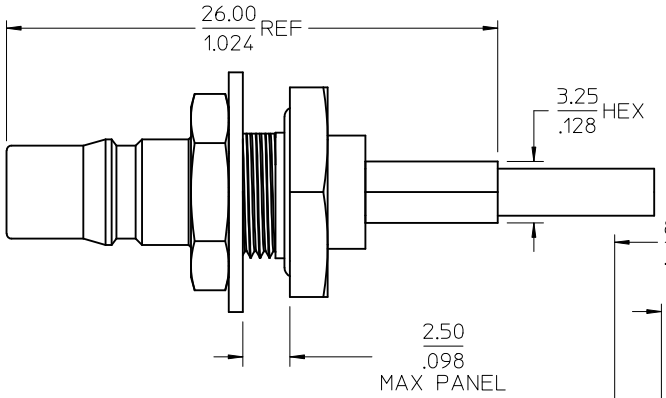

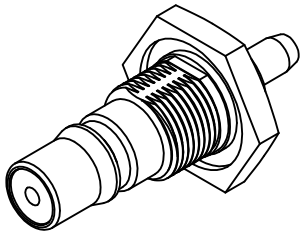

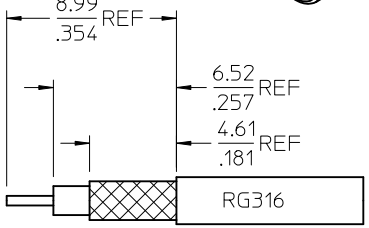

STRIPPING DIMENSIONS

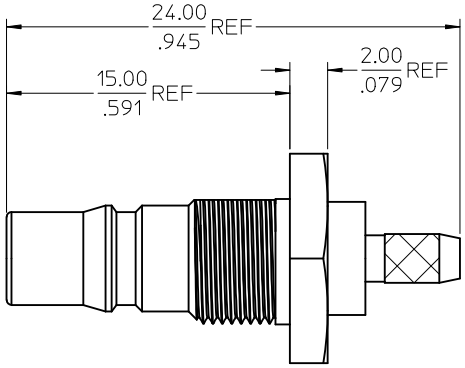

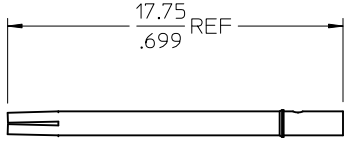

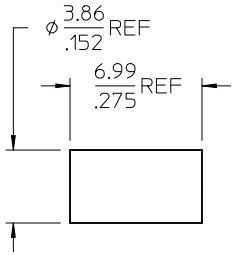

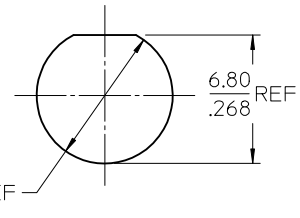

RECOMMENDED
PANEL CUTOUT

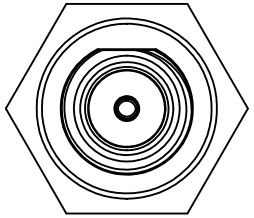

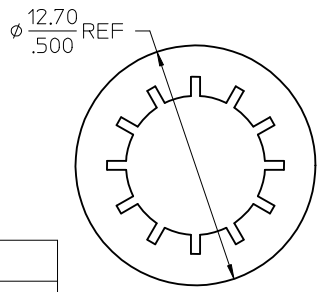

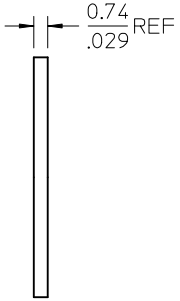

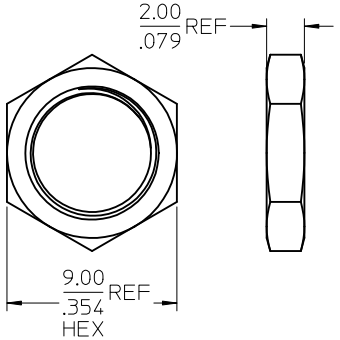

PART NO.	PACKAGING
73254-0101	ONE PIECE 73254-0100 PER BAG
73254-0100	BULK

CHG: CLARIFIED BAGGING.
EC NO: URF2010-0369
DRWN:AROBERTSON 2009/12/18
CH'KD:SSS 2009/12/18
APPR: JWIENER 2009/12/18
DESCRIPTION
B3
REV

QUALITY SYMBOLS
▼=0
▽C=0

GENERAL TOLERANCES (UNLESS SPECIFIED)

	mm	INCH
4 PLACES	± ---	± ---
3 PLACES	± ---	± ---
2 PLACES	± ---	± ---
1 PLACE	± ---	± ---
ANGULAR ± 2 °		

DRAFT WHERE APPLICABLE MUST REMAIN WITHIN DIMENSIONS

DIMENSION STYLE: MM/IN
SCALE
DESIGN UNITS: METRIC
THIRD ANGLE PROJECTION

		DATE
DRAWN BY	TEF	2003/10/07
CHECKED BY	SSS	2003/10/07
APPROVED BY	GMH	2003/10/07

TITLE: QMA JACK, RG316
50 OHMS, EWR-2192
QMA-JC

molex MOLEX INCORPORATED

MATERIAL NO.: SEE TABLE
DOCUMENT NO.: SD-73254-010
SHEET NO.: 1 OF 1
SIZE: C

THIS DRAWING CONTAINS INFORMATION THAT IS PROPRIETARY TO MOLEX INCORPORATED AND SHOULD NOT BE USED WITHOUT WRITTEN PERMISSION