THIS DRAWING IS UNPUBLISHED. RELEASED FOR PUBLICATION -,- .
© COPYRIGHT - BY TYCO ELECTRONICS CORPORATION. ALL RIGHTS RESERVED.

LOC	DIST
AD	00

REVISIONS

P	LTR	DESCRIPTION	DATE	DWN	APVD
	M1	ECO-05-012722	24JUL06	BSV	MK
	M2	REV PER ECO-09-021510	11AUG09	KK	AEG

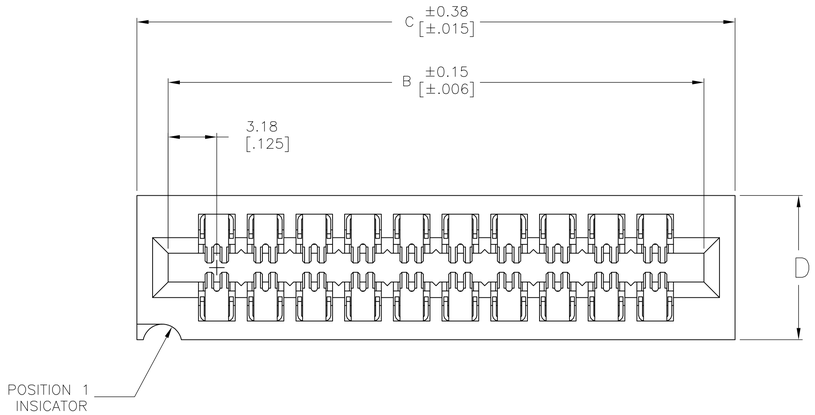

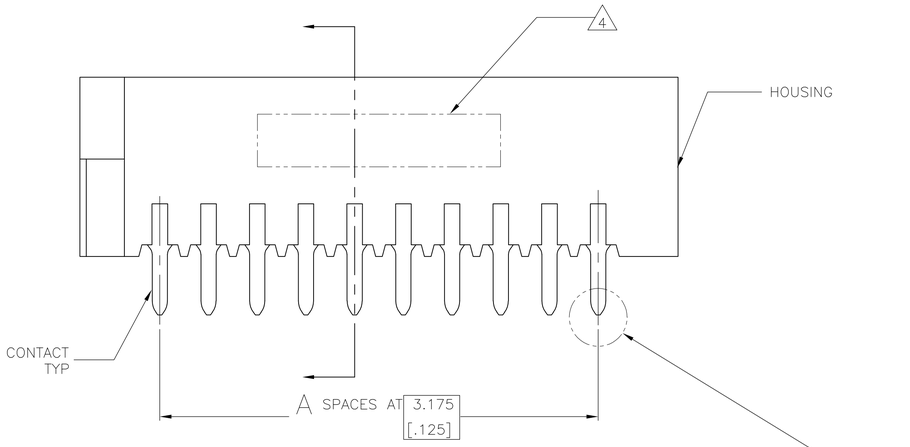

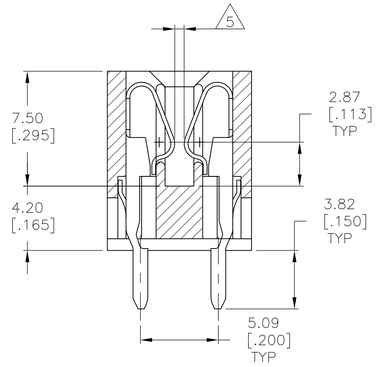

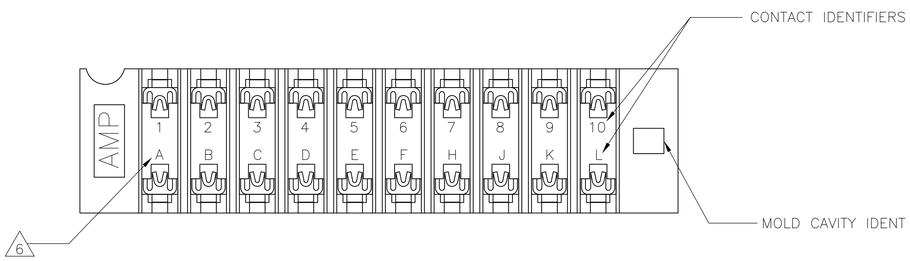

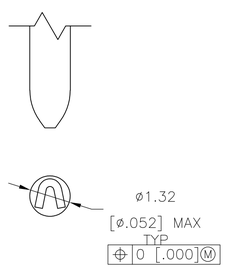

SCALE 10:1

1. HOUSING: GLASS FILLED POLYESTER, GREEN CONTACTS: PHOSPHOR BRONZE
2. 1.27µm[.000050] MIN THICK NICKEL PLATE ALL OVER, 0.76µm[.000030] MIN THICK GOLD PLATE OVER NICKEL IN CONTACT AREA AND 2.54µm[.000100] MIN THICK TIN-LEAD ON SOLDERTAIL
3. 1.27µm[.000050] MIN THICK NICKEL PLATE ALL OVER, 1.27µm[.000050] MIN THICK GOLD PLATE OVER NICKEL IN CONTACT AREA AND 2.54µm[.000100] MIN THICK TIN-LEAD ON SOLDERTAIL
4. AMP PART NUMBER AND DATE CODE MARKED IN THIS AREA
5. ACCEPTS 1.40-1.78[.055-.070] MATING DAUGHTERCARD
6. MOLDED CHARACTERS (UPPER & LOWER CASE LETTERS FOLLOWED BY UPPER CASE LETTERS AA, AB, ETC.) OMITTING LETTERS G,I,O, & Q
7. 1.27µm[.000050] MIN THICK NICKEL PLATE ALL OVER, 0.76µm[.000030] MIN THICK GOLD PLATE OVER NICKEL IN CONTACT AREA AND 2.54µm[.000100] MIN THICK TIN ON SOLDERTAIL
8. 1.27µm[.000050] MIN THICK NICKEL PLATE ALL OVER, 1.27µm[.000050] MIN THICK GOLD PLATE OVER NICKEL IN CONTACT AREA AND 2.54µm[.000100] MIN THICK TIN ON SOLDERTAIL
9. OBSOLETE PARTS: OBSOLETE CIS STREAMLINING PER D.RENAUD/D.SINISI

	D	C	B	A	CONTACT FINISH	NO OF POSN	PART NUMBER
OBSOLETE	9.40 [.370]	83.44 [3.285]	98.42 [3.125]	23	7	24	8-530671-3
OBSOLETE	9.40 [.370]	134.24 [5.285]	130.18 [5.125]	39	7	40	8-530671-0
OBSOLETE	9.40 [.370]	121.54 [4.785]	117.48 [4.625]	35	7	36	7-530671-9
OBSOLETE	9.40 [.370]	102.49 [4.035]	98.42 [3.875]	29	7	30	7-530671-7
	9.40 [.370]	96.14 [3.785]	92.08 [3.625]	27	7	28	7-530671-6
OBSOLETE	9.40 [.370]	77.089 [3.035]	73.025 [2.875]	21	7	22	7-530671-5
OBSOLETE	9.40 [.370]	64.39 [2.535]	60.32 [2.375]	17	7	18	7-530671-4
	9.40 [.370]	54.86 [2.160]	50.80 [2.000]	14	7	15	7-530671-3
	9.40 [.370]	38.99 [1.535]	34.92 [1.375]	9	7	10	7-530671-2
	9.40 [.370]	26.29 [1.035]	22.22 [.875]	5	7	6	7-530671-1
OBSOLETE	9.40 [.370]	92.14 [3.785]	92.08 [3.625]	27	8	28	6-530671-4
	9.40 [.370]	83.44 [3.285]	98.42 [3.125]	23	2	24	3-530671-3
9 OBSOLETE	9.40 [.370]	134.24 [5.285]	130.18 [5.125]	39	2	40	3-530671-0
OBSOLETE	9.40 [.370]	121.54 [4.785]	117.48 [4.625]	~~35~~	2	~~36~~	~~2-530671-9~~
9 OBSOLETE	9.40 [.370]	102.49 [4.035]	98.42 [3.875]	29	2	30	2-530671-7
9 SUPERSEDED	9.40 [.370]	96.14 [3.785]	92.08 [3.625]	27	2	28	2-530671-6
OBSOLETE	9.40 [.370]	64.39 [2.535]	60.32 [2.375]	~~17~~	2	~~18~~	~~2-530671-4~~
	9.40 [.370]	54.86 [2.160]	50.80 [2.000]	14	2	15	2-530671-3
	9.40 [.370]	38.99 [1.535]	34.92 [1.375]	9	2	10	2-530671-2
	9.40 [.370]	26.29 [1.035]	22.22 [.875]	5	2	6	2-530671-1
	9.40 [.370]	92.14 [3.785]	92.08 [3.625]	~~27~~	3	~~28~~	~~1-530671-4~~

THIS DRAWING IS A CONTROLLED DOCUMENT.

DIMENSIONS: mm [INCHES]

TOLERANCES UNLESS OTHERWISE SPECIFIED:
0 PLC ± -
1 PLC ± -
2 PLC ± 0.13 [.005]
3 PLC ± -
4 PLC ± -
ANGLES ± -

MATERIAL 1
FINISH -

DWN D. HARDY 12SEP97
CHK R. STONE 16SEP97
APVD D. WIKE 18SEP97
PRODUCT SPEC —
APPLICATION SPEC —
WEIGHT —

Tyco Electronics
Tyco Electronics Corporation
Harrisburg, Pa 17105-3608

NAME
CONNECTOR ASSEMBLY, .125CL X .200CL
W/O MOUNTING EARS, .150 SOLDERTAIL,
DUAL POSITION, LOW PROFILE

SIZE A1 | CAGE CODE 00779 | DRAWING NO C-530671 | RESTRICTED TO —

CUSTOMER DRAWING | SCALE 5:1 | SHEET 1 OF 1 | REV M2