THIS DRAWING IS UNPUBLISHED. RELEASED FOR PUBLICATION -,- .
© COPYRIGHT - By - ALL RIGHTS RESERVED.

LOC	DIST
ES	00

REVISIONS

P	LTR	DESCRIPTION	DATE	DWN	APVD
	C3	REVISED ECR-11-021545	24OCT11	C.Z	S.Y

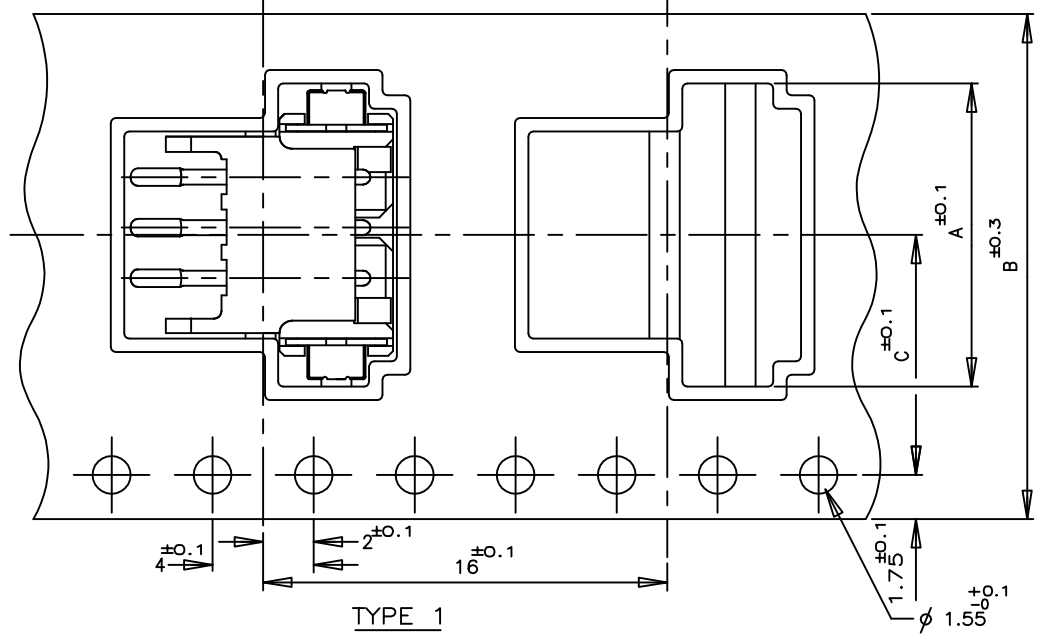

TYPE 1

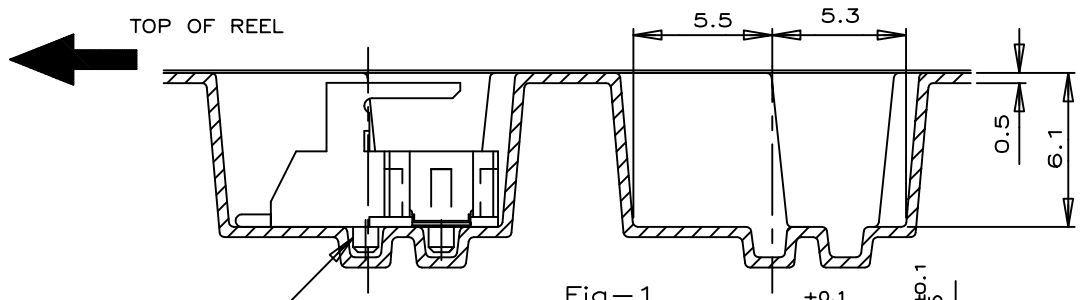

Fig-1

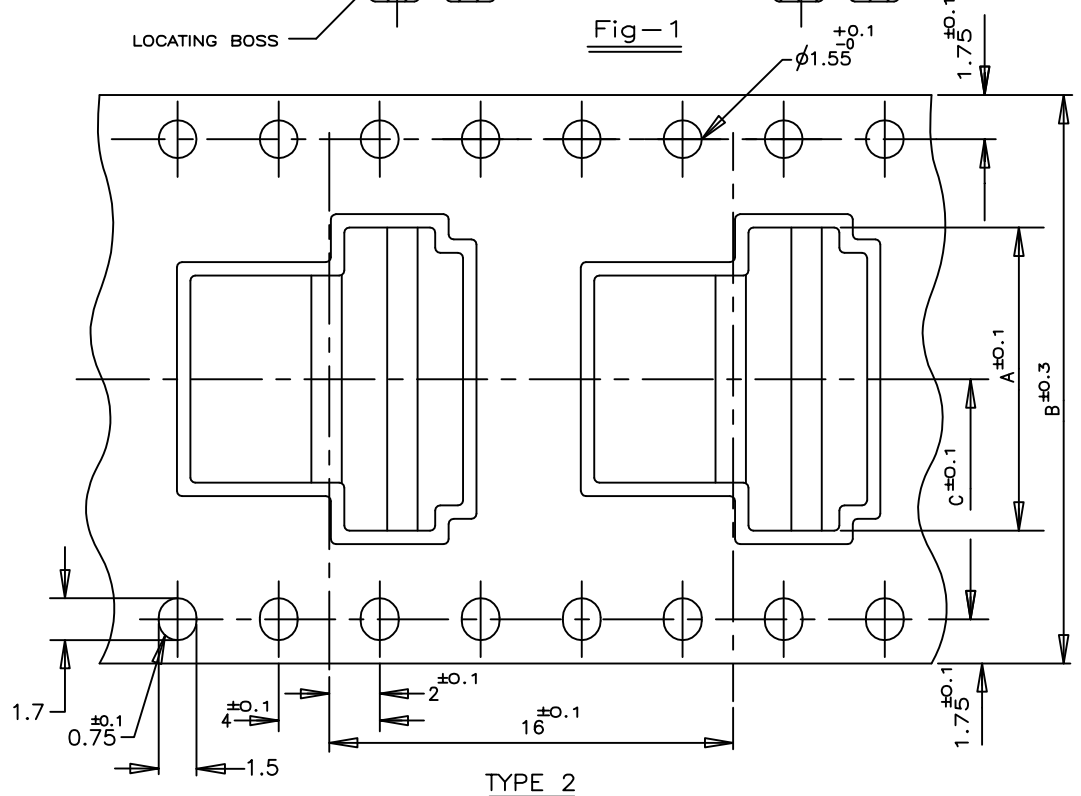

TYPE 2

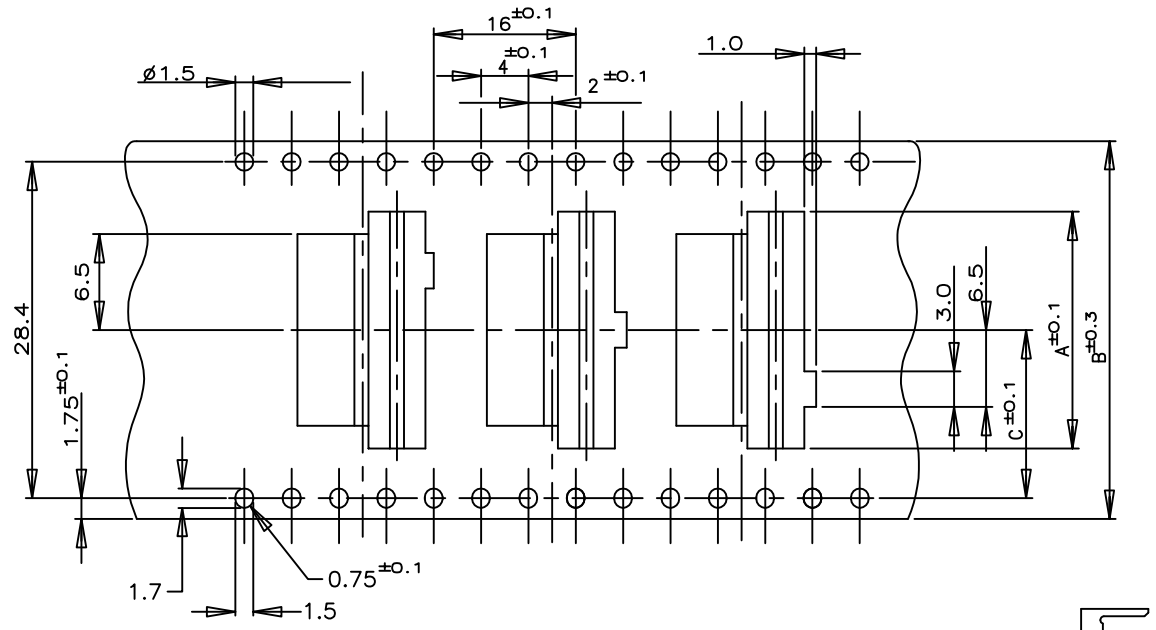

(AS SHOWN : 3P)

TYPE 3 FOR 7P ONLY

THREE KINDS OF DIFFERENT POCKETS AS 1 SET USED FOR 7P ONLY

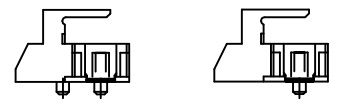

TYPE "A" TYPE "B"

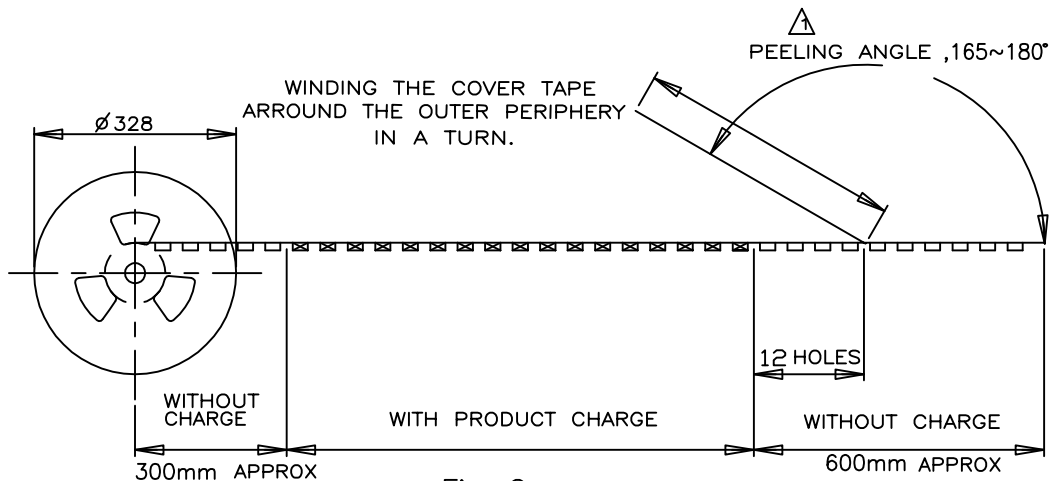

Fig-2

COLOR	PLATE	TAPE TYPE	TYPE OF BOSS	C	B	A	QTY/ REEL	Pos	TAPING P/N
NATURAL	WITH	TYPE 2	B	20.2	44	24	500	9	1-292173-9
			B	20.2	44	22		8	1- -8
		TYPE 3	B	14.2	32	20		7	1- -7
		TYPE 2	B	14.2	32	18		6	1- -6
		TYPE 1	B	11.5	24	16		5	1- -5
			B			14		4	1- -4
			A			12		3	1- -3
			A	11.5	24	10		2	1- -2
BLACK		TYPE 2	B	20.2	44	24		9	0- -9
			B	20.2	44	22		8	0- -8
		TYPE 3	B	14.2	32	20		7	0- -7
		TYPE 2	B	14.2	32	18		6	0- -6
		TYPE 1	B	11.5	24	16		5	0- -5
			B			14		4	0- -4
			A			12		3	0- -3
	WITH		A	11.5	24	10	500	2	0-292173-2

TOLERANCE UNLESS OTERWISE SPECIFIED:

10≥*	:±0.2
30≥*>10	:±0.25
100≥*>30	:±0.3
ANGLE	:±3'

NOTES:

1 PEELING RESISTANCE : 0.196N-0.686N (20gf-70gf)
SPEED : 300mm/min

THIS DRAWING IS A CONTROLLED DOCUMENT.

DIMENSIONS: MM

TOLERANCES UNLESS OTHERWISE SPECIFIED:

0 PLC	±
1 PLC	±
2 PLC	±
3 PLC	±
4 PLC	±
ANGLES	±

MATERIAL

FINISH

DWN	JACK HOU	21SEP10
CHK	MARTIN LI	21SEP10
APVD	STEVEN YAO	21SEP10
PRODUCT SPEC		
APPLICATION SPEC		
WEIGHT		

TE Connectivity

NAME

ON TAPING (EMBOSS)
TE CT CONNECTOR POST HEADER ASS'Y
(BOX-H SMT TYPE W/BOSS & TAIL)

SIZE	CAGE CODE	DRAWING NO	RESTRICTED TO
A3	00779	C-292173	—

CUSTOMER DRAWING

SCALE -/- SHEET 1 OF 6 REV C3

1470-19 (3/11)

THIS DRAWING IS UNPUBLISHED. RELEASED FOR PUBLICATION -,- .
© COPYRIGHT - By - ALL RIGHTS RESERVED.

LOC	DIST
ES	00

REVISIONS

P	LTR	DESCRIPTION	DATE	DWN	APVD
	-	SEE SHEET 1	-	-	-

(AS SHOWN : 3P)

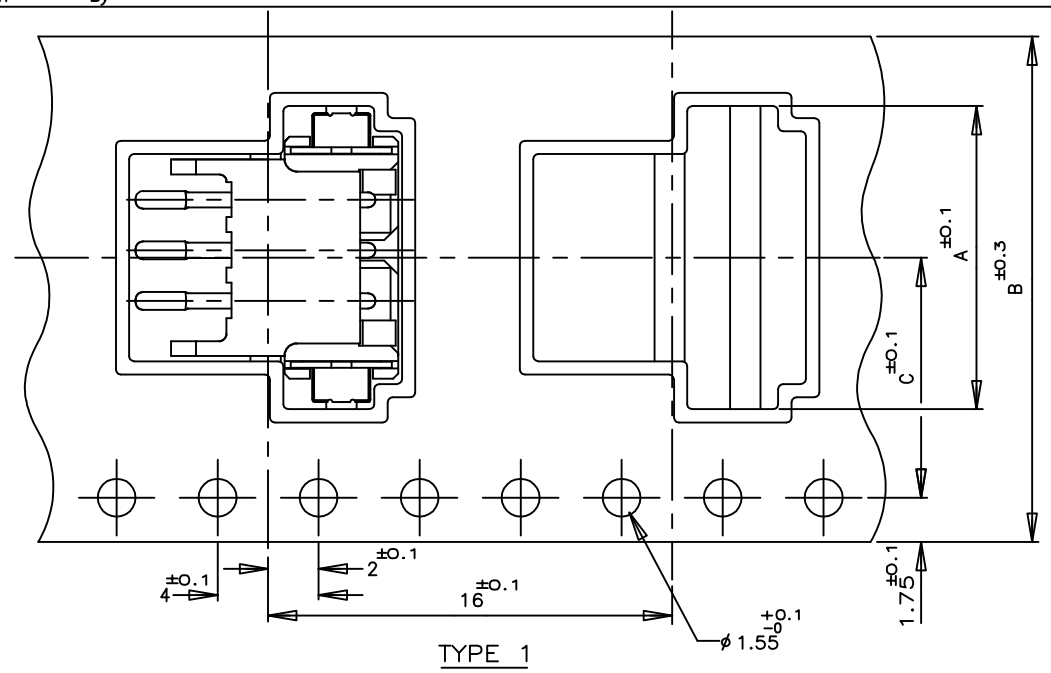

TYPE 1

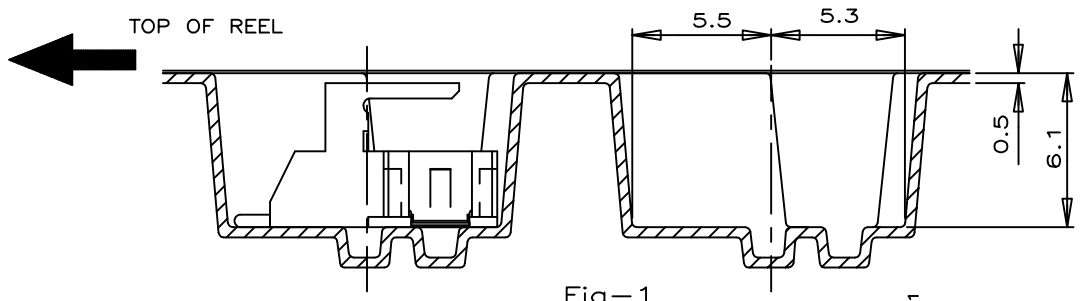

Fig-1

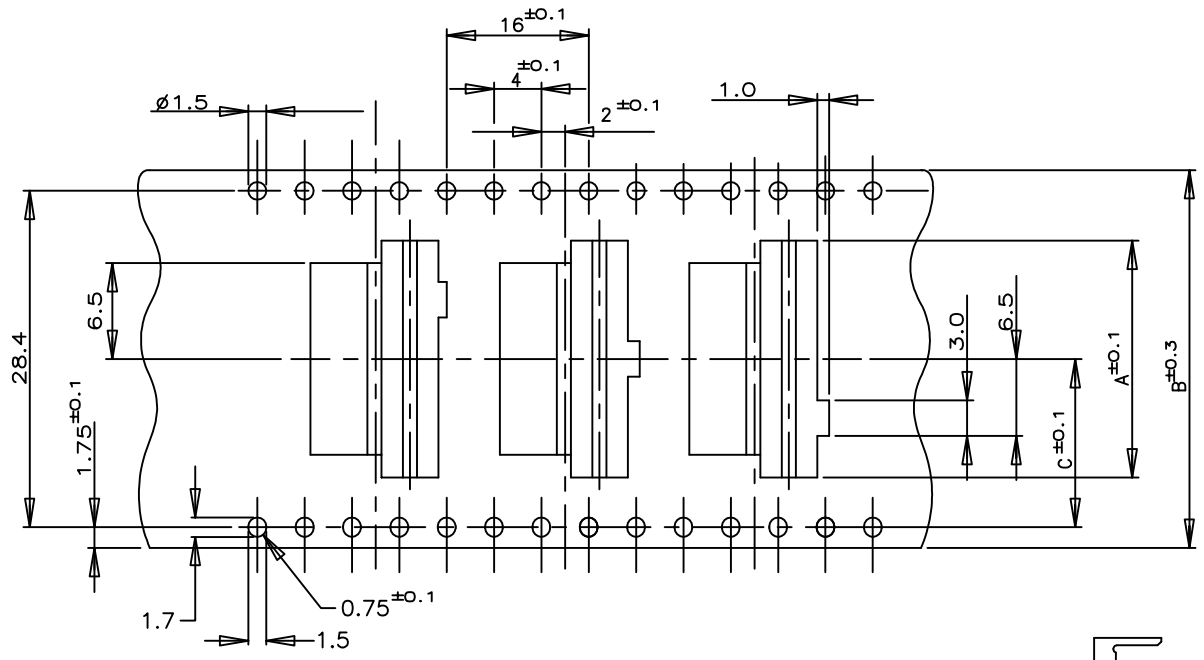

TYPE 3 FOR 7P ONLY

THREE KINDS OF DIFFERENT POCKETS AS 1 SET USED FOR 7P ONLY

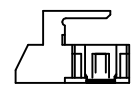

TYPE "A"

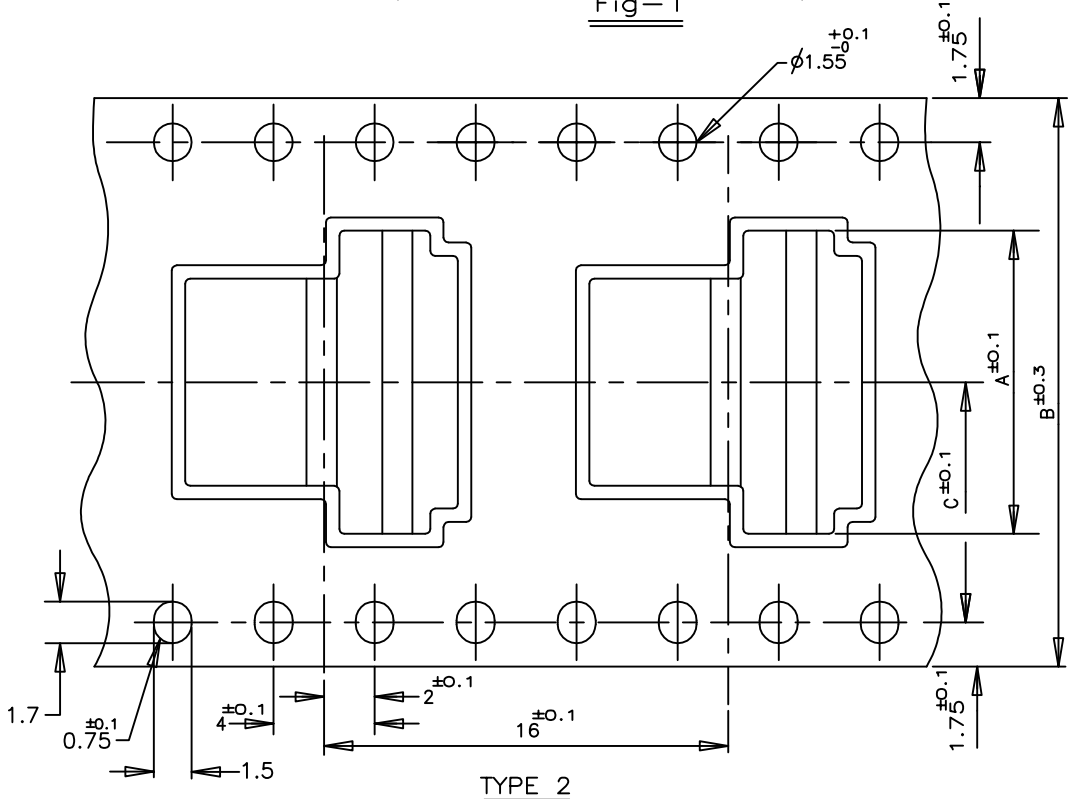

TYPE 2

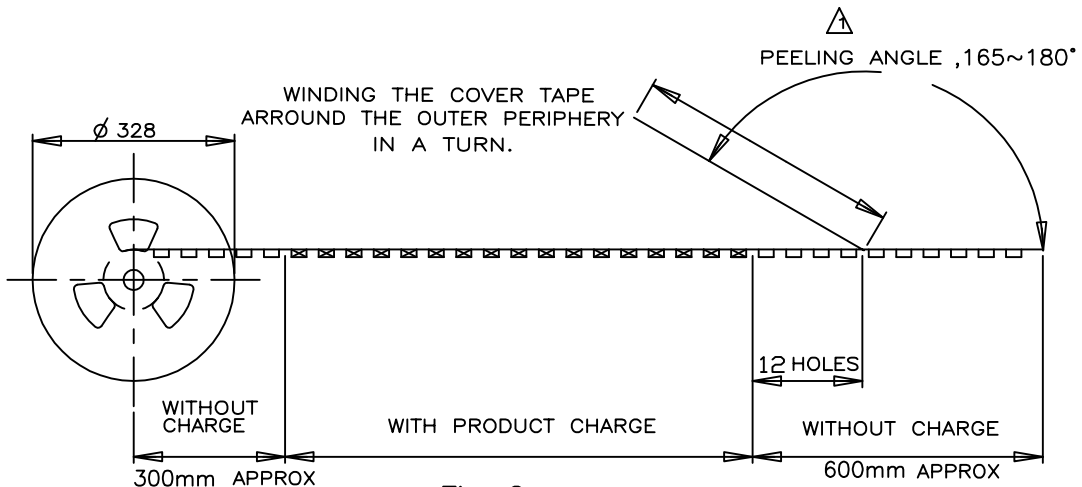

Fig-2

COLOR	PLATE	TAPE TYPE	TYPE OF BOSS	C	B	A	QTY/ REEL	Pos	TAPING P/N
NATURAL	WITH	TYPE 2	A	20.2	44	24	500	9	3-292173-9
			A	20.2	44	22		8	3- -8
		TYPE 3	A	14.2	32	20		7	3- -7
		TYPE 2	A	14.2	32	18		6	3- -6
		TYPE 1	A	11.5	24	16		5	3- -5
			A			14		4	3- -4
			A			12		3	3- -3
			A	11.5	24	10		2	3- -2
BLACK		TYPE 2	A	20.2	44	24		9	2- -9
			A	20.2	44	22		8	2- -8
		TYPE 3	A	14.2	32	20		7	2- -7
		TYPE 2	A	14.2	32	18		6	2- -6
		TYPE 1	A	11.5	24	16		5	2- -5
			A			14		4	2- -4
			A			12		3	2- -3
	WITH		A	11.5	24	10	500	2	2-292173-2

TOLERANCE UNLESS OTERWISE SPECIFIED:

10≥*	:±0.2
30≥*>10	:±0.25
100≥*>30	:±0.3
ANGLE	:±3°

NOTES:

1 PEELING RESISTANCE : 0.196N-0.686N (20gf-70gf)
SPEED : 300mm/min

THIS DRAWING IS A CONTROLLED DOCUMENT.

DIMENSIONS: MM

TOLERANCES UNLESS OTHERWISE SPECIFIED:

0 PLC	±
1 PLC	±
2 PLC	±
3 PLC	±
4 PLC	±
ANGLES	±

MATERIAL -

FINISH -

DWN
CHK
APVD
PRODUCT SPEC -
APPLICATION SPEC -
WEIGHT -

CUSTOMER DRAWING

TE Connectivity

NAME
ON TAPING (EMBOSS)
TE CT CONNECTOR POST HEADER ASS'Y
(BOX-H SMT TYPE W/O BOSS & W/ TAIL)

SIZE	CAGE CODE	DRAWING NO	RESTRICTED TO
A3	00779	C-292173	-

SCALE -/- | SHEET 2 OF 6 | REV C3

1470-19 (3/11)

THIS DRAWING IS UNPUBLISHED. RELEASED FOR PUBLICATION -,- .
© COPYRIGHT - By - ALL RIGHTS RESERVED.

LOC	DIST
ES	00

REVISIONS

P	LTR	DESCRIPTION	DATE	DWN	APVD
	-	SEE SHEET 1	-	-	-

(AS SHOWN : -4)

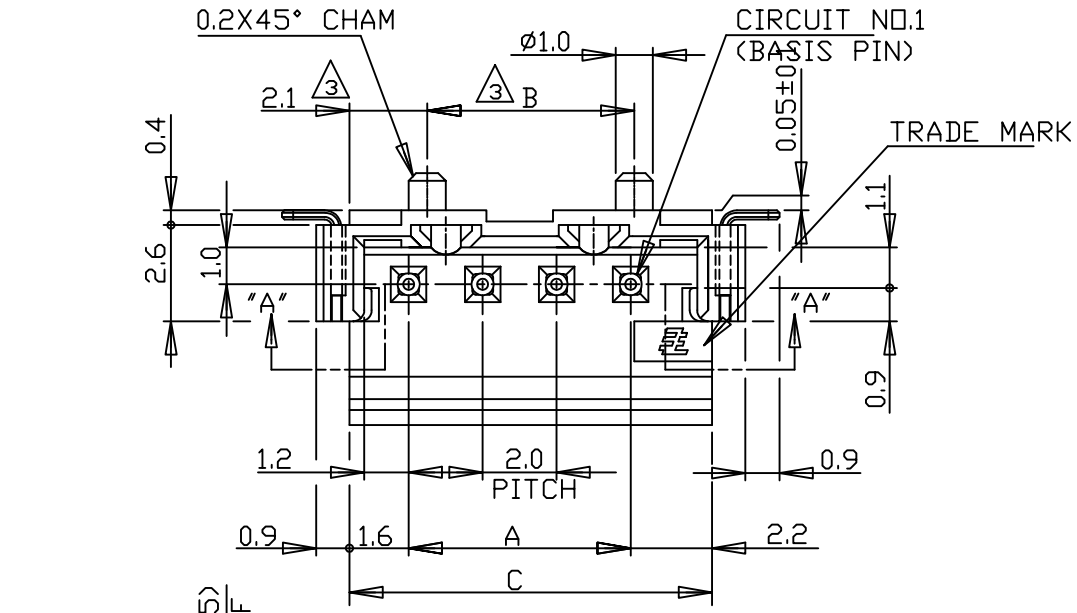

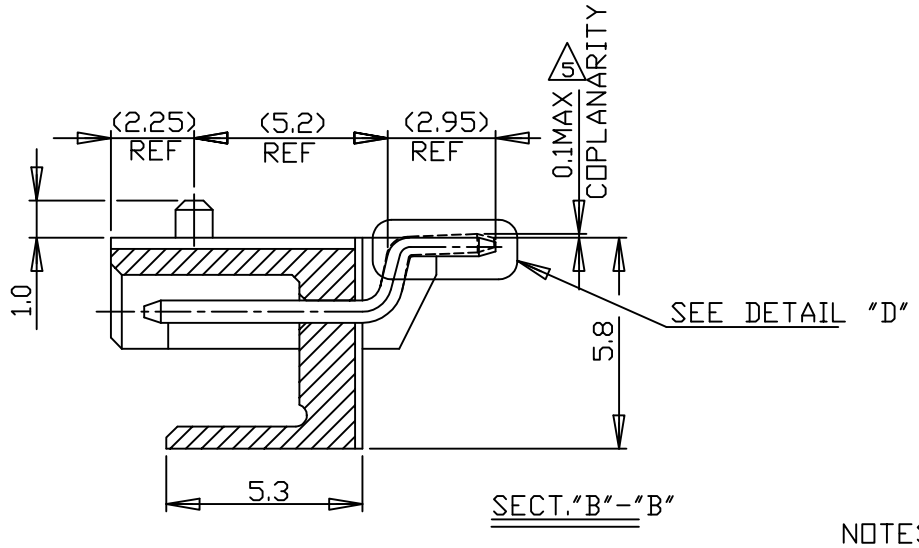

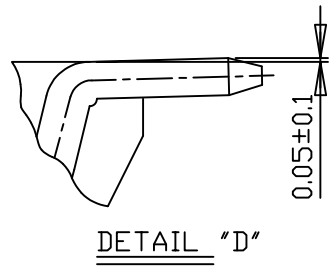

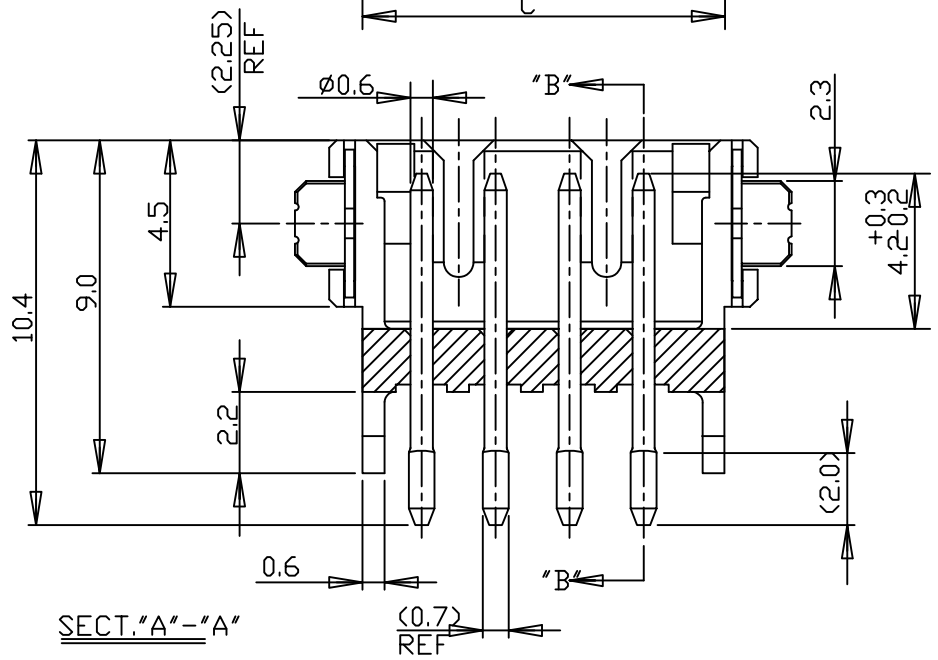

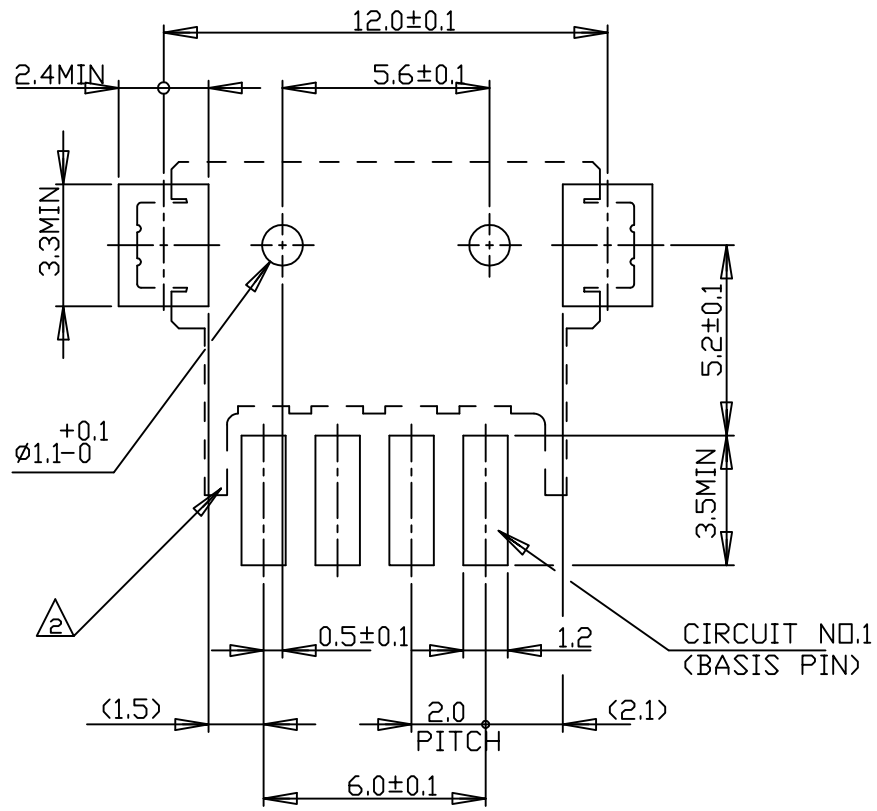

NO ACCUMULATED TOLERANCE
RECOMMENDED P.C.BOARD LAYOUT
(P.C.B. THK:0.8mm MIN)

NOTES:
1. MATERIAL:HSG-6T PA(G.F.30%)(UL94V-0)
COLOR:BLACK ,NATURAL
POST: TIN BRASS
TAIL: TIN BRASS
2. OCCUPANT AREA ON PC BOARD
3. 4P&ABOVE POS.
4. 2P&3P
5. TO BE MEASURED WITH CONNECTOR PLACED ON HORIZONTAL DATUM SURFACE ,FLOAT OF SOLDER TINE AND TAIL FROM DATUM SURFACE IS 0.1mm MAX

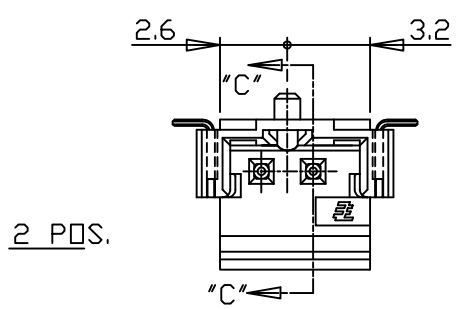

2 POS.

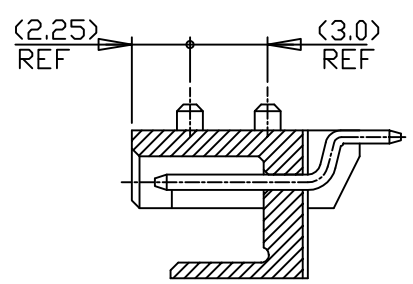

SECT."C"-"C"

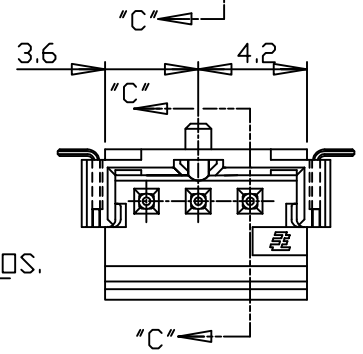

3 POS.

A	B	C	D	Pos.	NATURAL	BLACK
16.0	15.6	19.8	22.0	9	1-292173-9	292173-9
14.0	13.6	17.8	20.0	8	1- -8	-8
12.0	11.6	15.8	18.0	7	1- -7	-7
10.0	9.6	13.8	16.0	6	1- -6	-6
8.0	7.6	11.8	14.0	5	1- -5	-5
6.0	5.6	9.8	-//-	4	1- -4	-4
4.0	-//-	7.8	-//-	3	1- -3	-3
2.0	-//-	5.8	-//-	2	1-292173-2	292173-2

P/N

TOLERANCES UNLESS OTHERWISE SPECIFIED:
10>* : ±0.2
30>*>10 : ±0.25
100>*>30 : ±0.3
ANGEL : ±3°

THIS DRAWING IS A CONTROLLED DOCUMENT.

DIMENSIONS: MM

TOLERANCES UNLESS OTHERWISE SPECIFIED:
0 PLC ± -
1 PLC ± -
2 PLC ± -
3 PLC ± -
4 PLC ± -
ANGLES ± -

MATERIAL: SEE NOTE
FINISH: SEE NOTE

DWN -
CHK -
APVD -
PRODUCT SPEC 108-60016
APPLICATION SPEC -
WEIGHT -

TE Connectivity

NAME: SMT TYPE POST HDR ASS'Y (H) WITH BOSS & TAIL TYPE (TE CT CONN. 2mm PITCH)

SIZE	CAGE CODE	DRAWING NO	RESTRICTED TO
A3	00779	C-292173	-

CUSTOMER DRAWING | SCALE 5:1 | SHEET 3 OF 6 | REV C3

1470-19 (3/11)

THIS DRAWING IS UNPUBLISHED. RELEASED FOR PUBLICATION -,- .
© COPYRIGHT - By - ALL RIGHTS RESERVED.

LOC	DIST
ES	00

REVISIONS

P	LTR	DESCRIPTION	DATE	DWN	APVD
	-	SEE SHEET 1	-	-	-

LAYOUT FOR 292173-X,1-292173-X

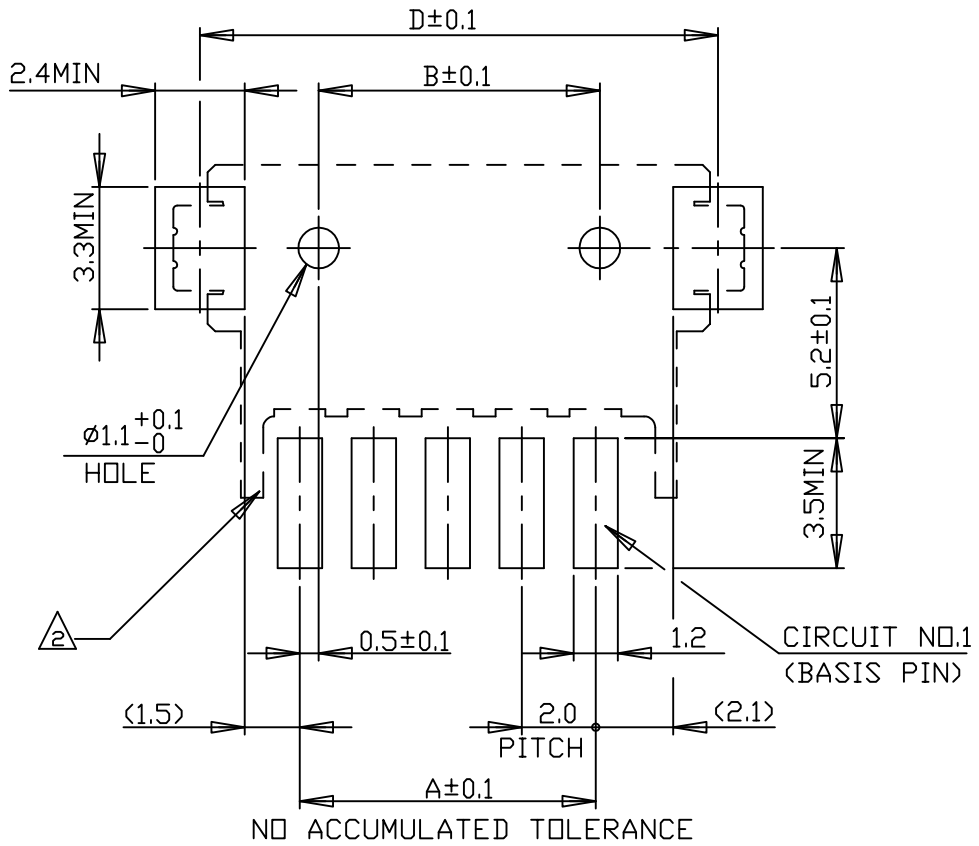

5 POS. & ABOVE POS.

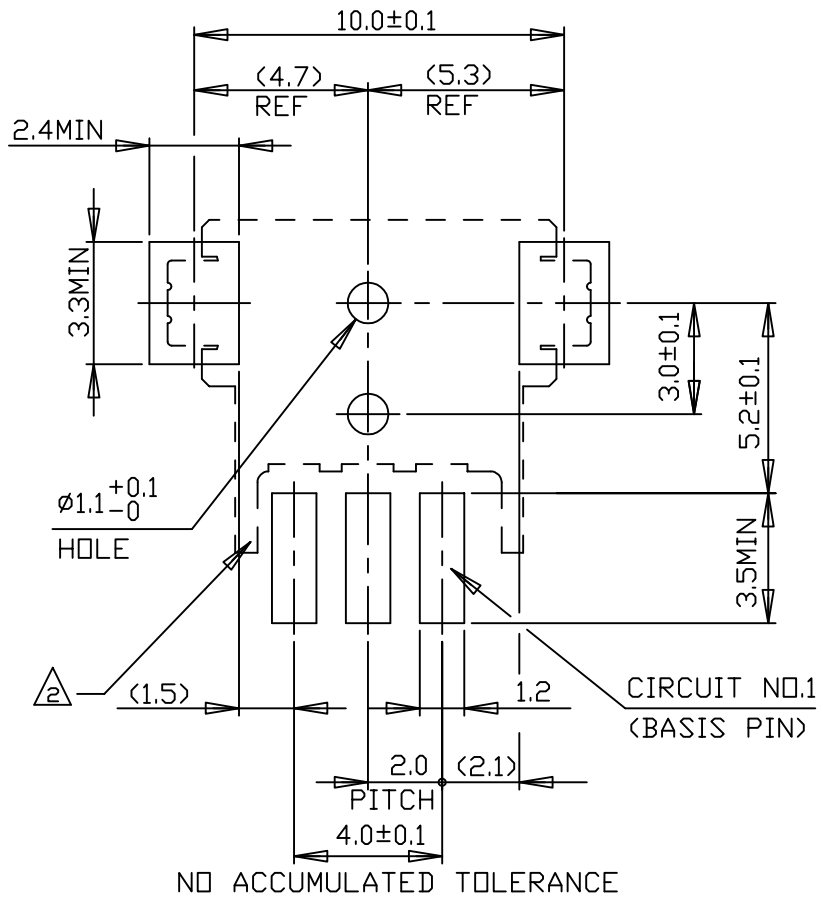

3 POS.

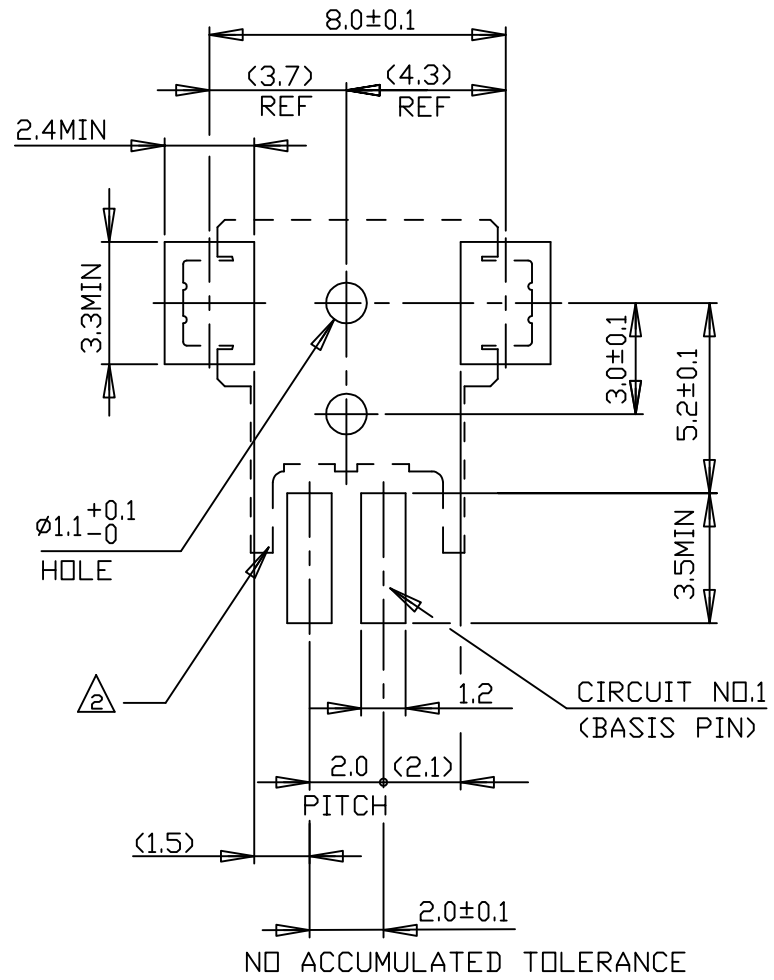

2 POS.

RECOMMENDED P.C. BOARD LAYOUT
(P.C.B THK:0.8mm MIN)

THIS DRAWING IS A CONTROLLED DOCUMENT.

DIMENSIONS: MM

TOLERANCES UNLESS OTHERWISE SPECIFIED:
0 PLC ± -
1 PLC ± -
2 PLC ± -
3 PLC ± -
4 PLC ± -
ANGLES ± -

MATERIAL -

FINISH -

DWN -
CHK -
APVD -
PRODUCT SPEC -
APPLICATION SPEC -
WEIGHT -

CUSTOMER DRAWING

TE Connectivity

NAME
SMT TYPE POST HDR ASS'Y (H)
WITH BOSS &TAIL TYPE
(TE CT CONN. 2mm PITCH)

SIZE	CAGE CODE	DRAWING NO	RESTRICTED TO
A3	00779	C-292173	-

SCALE	SHEET	REV
5:1	4 OF 6	C3

THIS DRAWING IS UNPUBLISHED. RELEASED FOR PUBLICATION -,- .
© COPYRIGHT - By - ALL RIGHTS RESERVED.

LOC	DIST
ES	00

REVISIONS

P	LTR	DESCRIPTION	DATE	DWN	APVD
	-	SEE SHEET 1	-	-	-

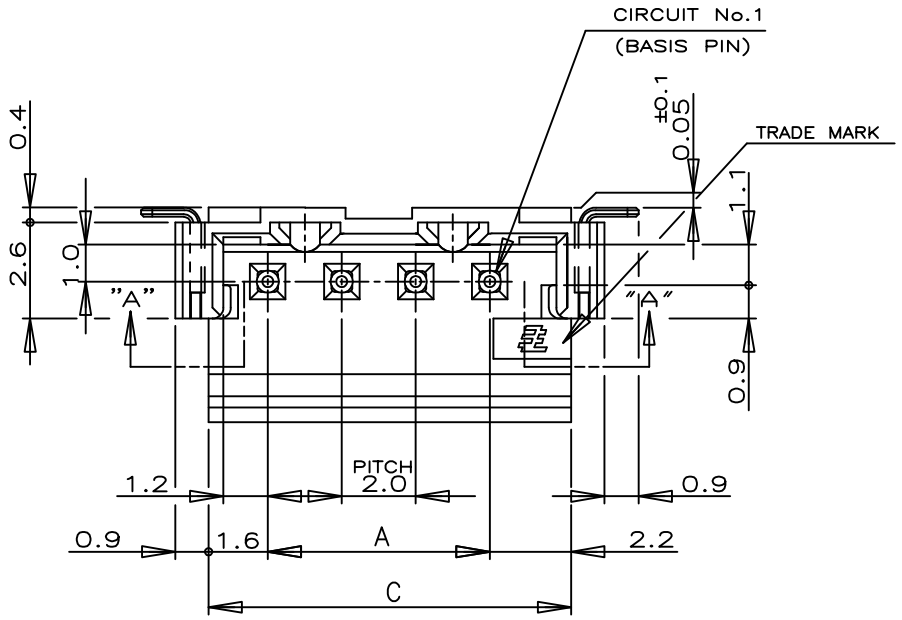

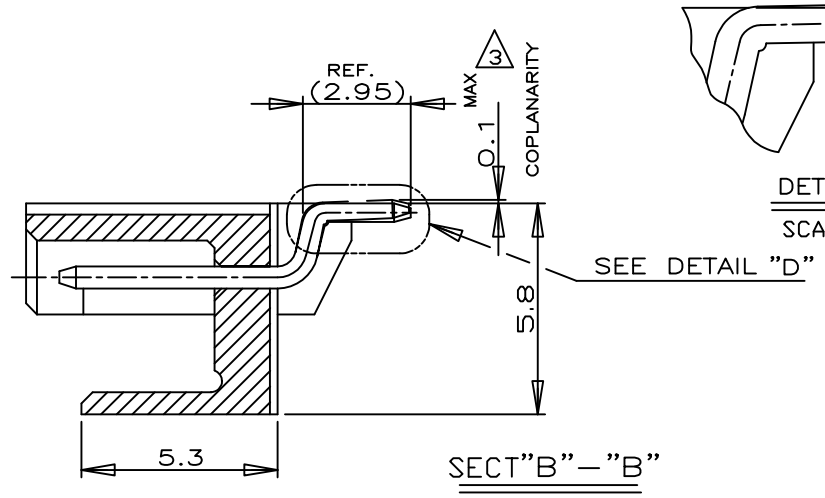

SECT"B"-"B"

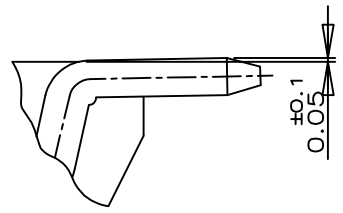

DETAIL "D"
SCALE 10-1

(AS SHOWN :4P)

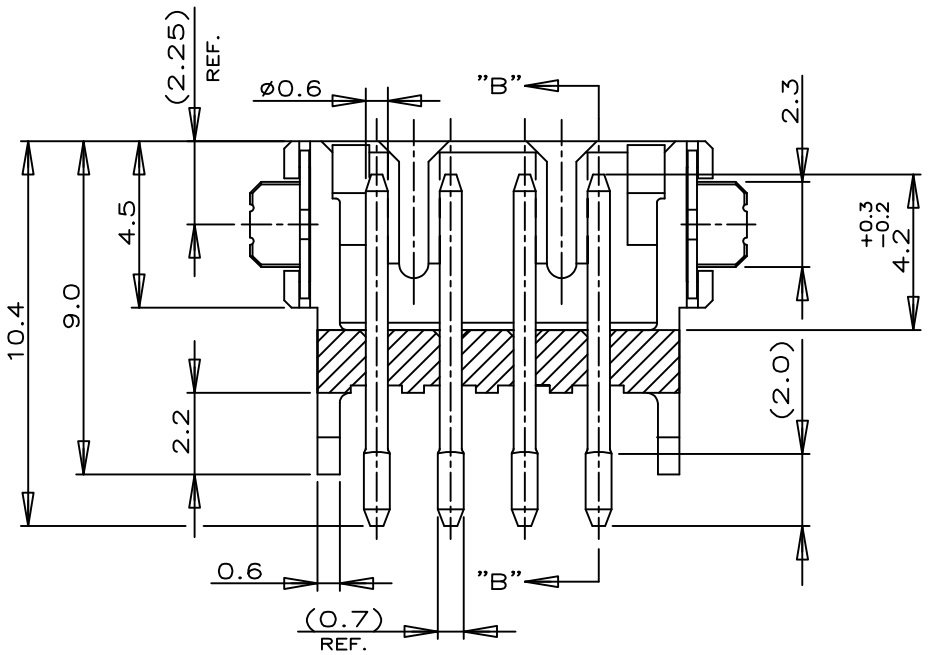

SECT"A"-"A"

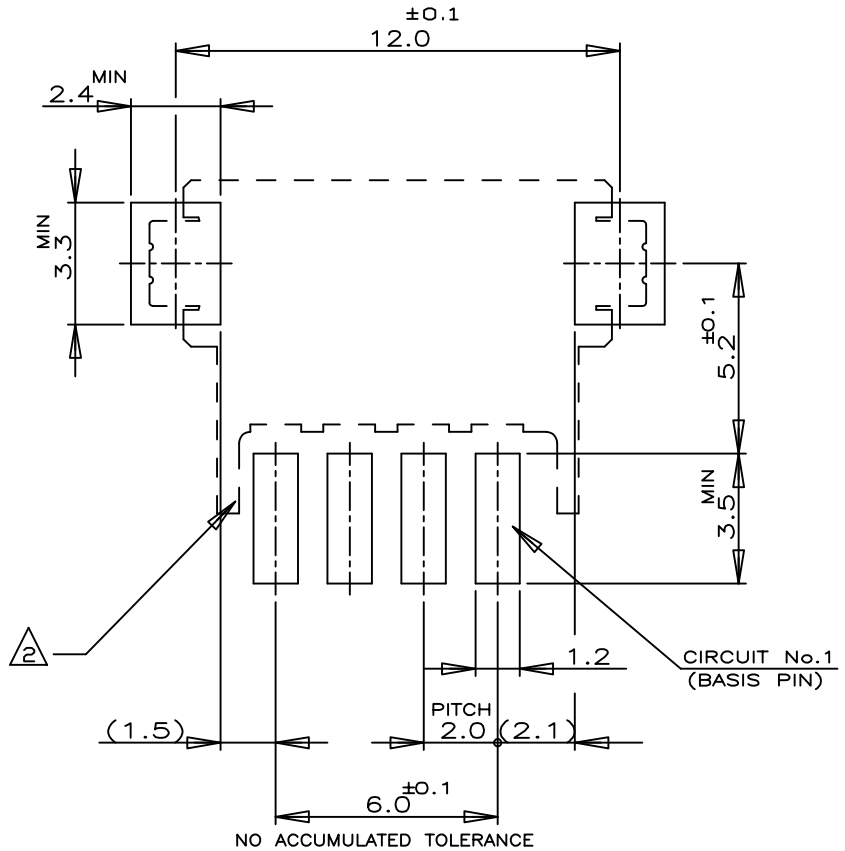

RECOMENOED P.C.BOARD LAYOUT
(P.C.B THK:0.8mm MIN)

NOTES;

1. MATERIAL : HSG-6T PA(G.F.30%)(UL94V-0)
   COLOR:BLACK,NATURAL
   POST:TIN BRASS
   TAIL: TIN BRASS

2. OCCUPANT AREA ON PC BOARD

3. TO BE MEASURED WITH CONNECTOR PLACED ON HORIZONTAL DATUM SURFACE,FLOAT OF SOLDER TINE AND TAIL FROM DATUM SURFACE IS 0.1mm MAX

A	C	D	Pos.	NATURAL		BLACK	
				P/N			
16.0	19.8	22.0	9	3-292173-9		2-292173-9	
14.0	17.8	20.0	8	3-	-8	2-	-8
12.0	15.8	18.0	7	3-	-7	2-	-7
10.0	13.8	16.0	6	3-	-6	2-	-6
8.0	11.8	14.0	5	3-	-5	2-	-5
6.0	9.8	-//-	4	3-	-4	2-	-4
4.0	7.8	-//-	3	3-	-3	2-	-3
2.0	5.8	-//-	2	3-292173-2		2-292173-2	

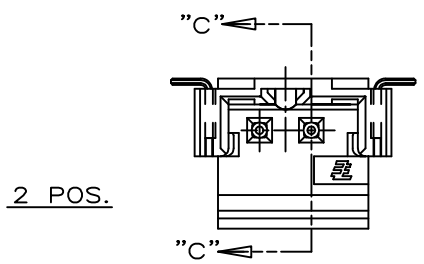

2 POS.

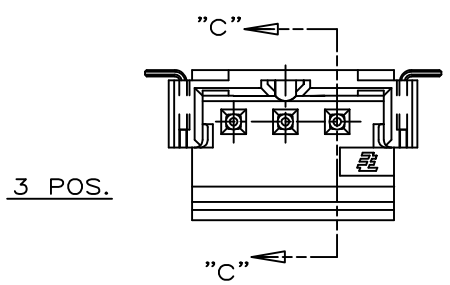

3 POS.

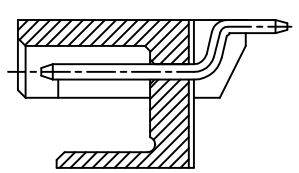

SECT"C"-"C"

TOLERANCES UNLESS OTHERWISE SPECIFIED:
10≥* : ±0.2
30≥*>10 : ±0.25
100≥*>30 : ±0.3
ANGEL : ±3°

THIS DRAWING IS A CONTROLLED DOCUMENT.

DIMENSIONS: MM

TOLERANCES UNLESS OTHERWISE SPECIFIED:
0 PLC ±-
1 PLC ±-
2 PLC ±-
3 PLC ±-
4 PLC ±-
ANGLES ±-

MATERIAL: SEE NOTE
FINISH: SEE NOTE

DWN -
CHK -
APVD -
PRODUCT SPEC: 108-60016
APPLICATION SPEC: -
WEIGHT: -

TE Connectivity

NAME: SMT TYPE POST HDR ASS'Y (BOX-H) W/O BOSS,WITH TAIL TYPE (TE CT CONN. 2mm PITCH)

SIZE	CAGE CODE	DRAWING NO	RESTRICTED TO
A3	00779	C-292173	-

CUSTOMER DRAWING | SCALE 5:1 | SHEET 5 OF 6 | REV C3

1470-19 (3/11)

THIS DRAWING IS UNPUBLISHED. RELEASED FOR PUBLICATION -,- .
© COPYRIGHT - By - ALL RIGHTS RESERVED.

LOC	DIST
ES	00

REVISIONS

P	LTR	DESCRIPTION	DATE	DWN	APVD
	-	SEE SHEET 1	-	-	-

LAYOUT FOR 2-292173-X,3-2-292173-X

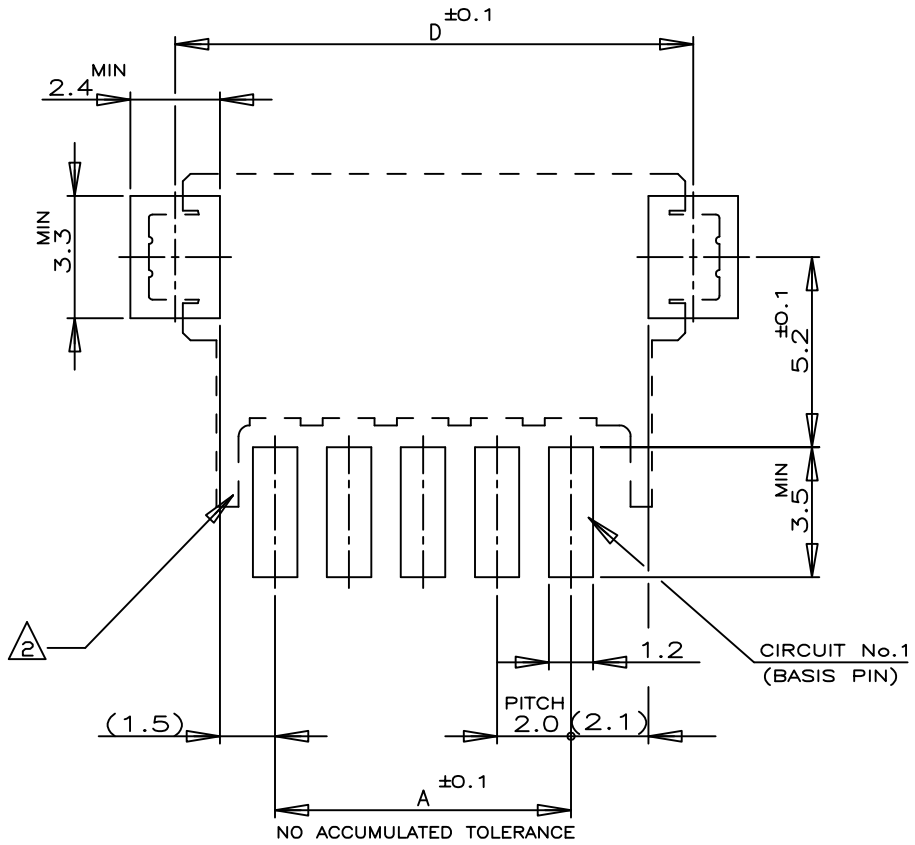

5 POS & ABOVE POS

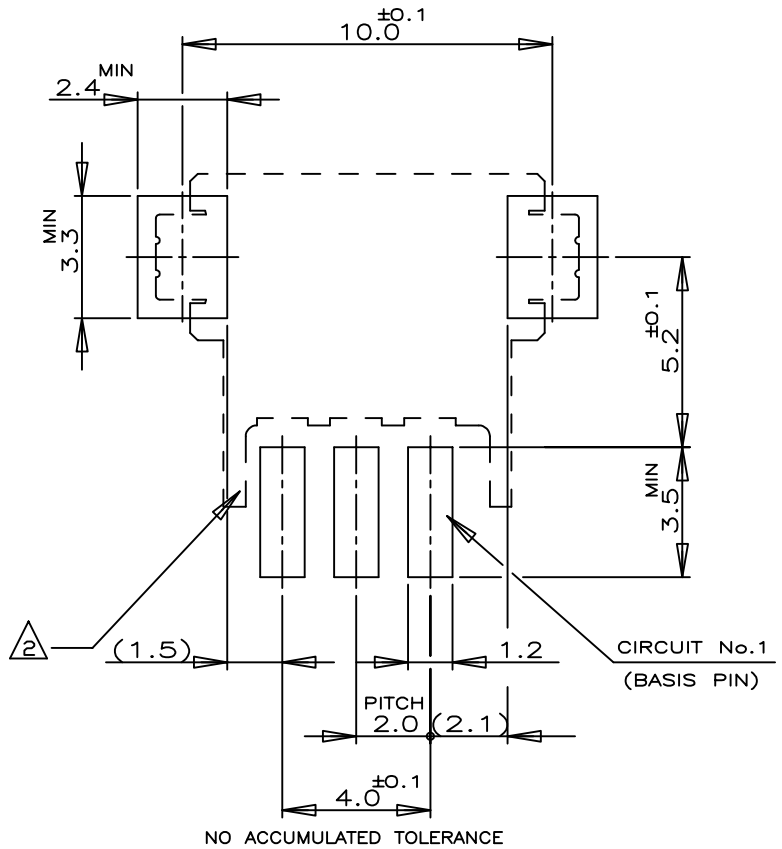

3 POS

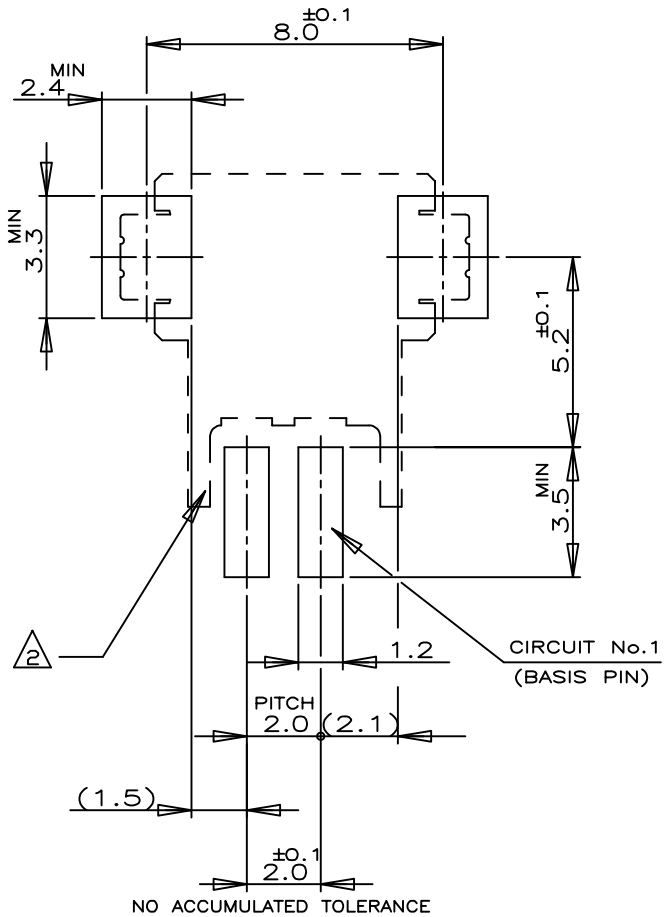

2POS

RECOMENOED P.C.BOARD LAYOUT
(P.C.B THK:0.8mm MIN)

THIS DRAWING IS A CONTROLLED DOCUMENT.

DIMENSIONS: MM

TOLERANCES UNLESS OTHERWISE SPECIFIED:
0 PLC ± -
1 PLC ± -
2 PLC ± -
3 PLC ± -
4 PLC ± -
ANGLES ± -

MATERIAL -

FINISH -

DWN -
CHK -
APVD -
PRODUCT SPEC -
APPLICATION SPEC -
WEIGHT -

CUSTOMER DRAWING

TE Connectivity

NAME
SMT TYPE POST HDR ASS'Y (H)
W/O,WITH TAIL TYPE
(TE CT CONN. 2mm PITCH)

SIZE	CAGE CODE	DRAWING NO	RESTRICTED TO
A3	00779	C-292173	-

SCALE	SHEET	REV
5:1	6 OF 6	C3

1470-19 (3/11)