THIS DRAWING IS UNPUBLISHED. RELEASED FOR PUBLICATION - ,- .
© COPYRIGHT - By - ALL RIGHTS RESERVED.

LOC	DIST
AA	00

REVISIONS

P	LTR	DESCRIPTION	DATE	DWN	APVD
	B1	REVISED PER ECO-11-005140	28MAR11	RK	HMR

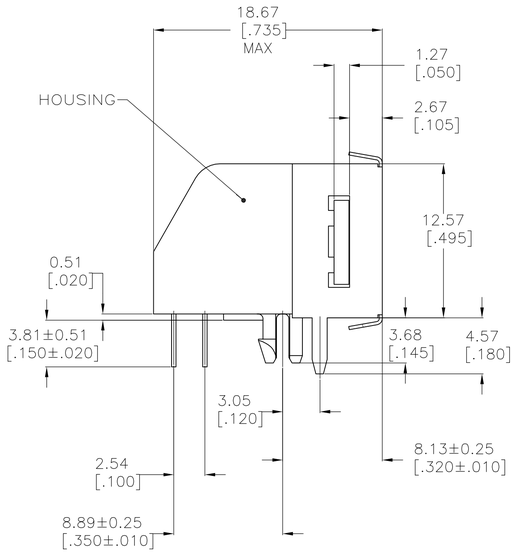

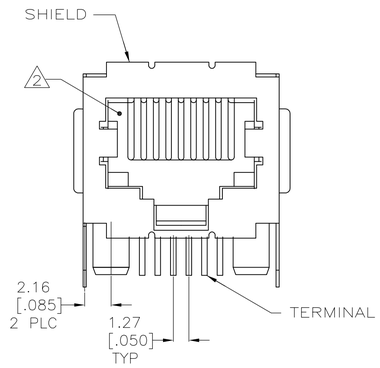

1. MATERIAL:
   HOUSING (SEE TABLE) – COLOR: BLACK
   TERMINAL – 0.36[.014] THICK PHOS BRONZE PLATED WITH 1.27µm [.000050] THICK HARD GOLD IN LOCALIZED GOLD PLATE AREA AND 3.81µm [.000150] THICK MATTE TIN IN SOLDER AREA OVER 1.27µm [.000050] THICK NICKEL UNDERPLATE
   SHIELD – 0.25 [.010] THICK COPPER ALLOY PLATED WITH 3.0µm [.000120] MINIMUM THICK REFLOWED TIN

2. CAVITY CONFORMS TO FCC RULES AND REGULATIONS PART 68, SUBPART F.

3. DIMENSIONS MEASURED ALONG FRONT EDGES OF MATING FACE

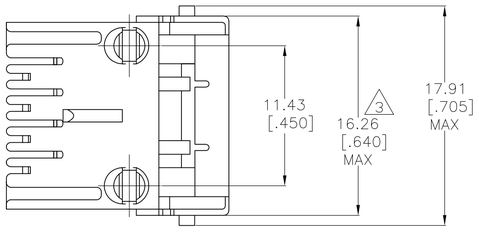

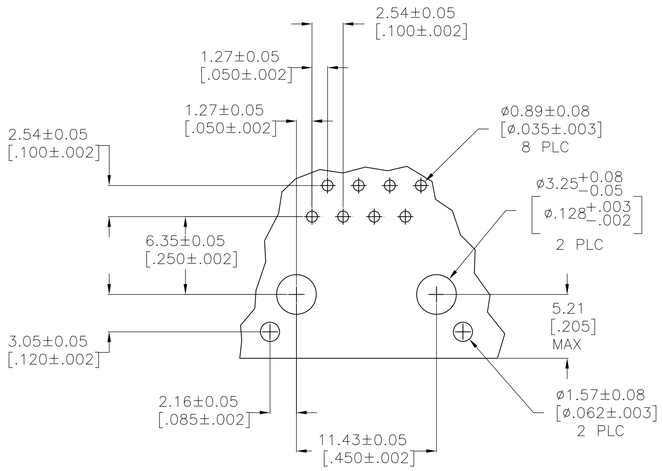

RECOMMENDED PRINTED CIRCUIT BOARD LAYOUT
(COMPONENT SIDE)

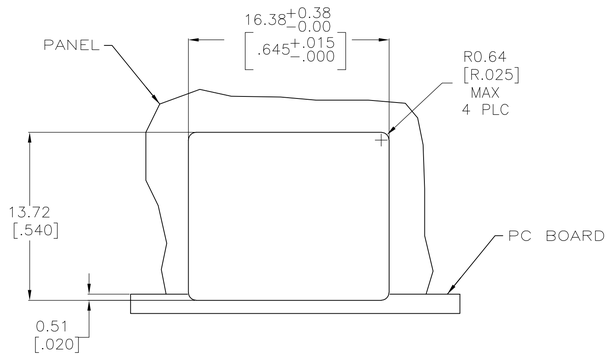

RECOMMENDED PANEL CUTOUT

YES	HIGH TEMP NYLON	5555141-3
NO	PBT POLYESTER	5555141-1
IR PROCESS COMPATIBLE	HOUSING MATERIAL	PART NUMBER

THIS DRAWING IS A CONTROLLED DOCUMENT.

DIMENSIONS: mm [INCHES]

TOLERANCES UNLESS OTHERWISE SPECIFIED:
0 PLC ± –
1 PLC ± –
2 PLC ± 0.13[.005]
3 PLC ± –
4 PLC ± –
ANGLES ± –

MATERIAL: SEE NOTE 1
FINISH: SEE NOTE 1

DWN 04APR2005 G. GARRETT/L.A.MAYER
CHK 04APR2005 J.WESTMAN
APVD 04APR2005 S.FLICKINGER
PRODUCT SPEC 108-1163
APPLICATION SPEC 114-2048
WEIGHT –

TE Connectivity

NAME: MODULAR JACK ASSEMBLY, SHIELDED, 8 POSITION, LOW PROFILE, RIGHT ANGLE, PANEL GROUND WITH PANEL STOPS

SIZE	CAGE CODE	DRAWING NO	RESTRICTED TO
A1	00779	C-5555141	–

CUSTOMER DRAWING | SCALE 4:1 | SHEET 1 OF 1 | REV B1

4805 (3/11)