PART NO.	"A"	"B"	METAL INSERT M3	4/40	STD. PACKAGE QUANTITY	FIG. NO.
VMCGN-065-M3-LSWT-K	2.56 (65)	2.24 (57)	X		100	1
VMCGN-065-4/40-LSWT				X	100	1
VMCGN-105-M3-LSWT-K	4.13 (105)	3.82 (97)	X		100	2+3
VMCGN-105-4/40-LSWT				X	100	2+3
VMCGN-120-M3-LSWT-K	4.72 (120)	4.41 (112)	X		100	1
VMCGN-120-4/40-LSWT				X	100	1
VMCGN-160-M3-LSWT-K	6.30 (160)	5.98 (152)	X		100	2+3
VMCGN-160-4/40-LSWT				X	100	2+3
VMCGN-EX-40	40	32			100	3

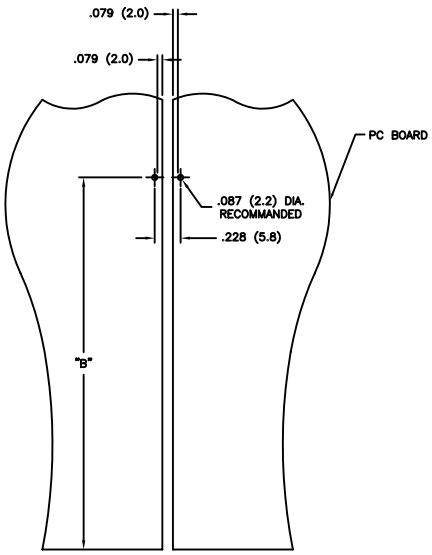

BOARD HOLE LOCATION

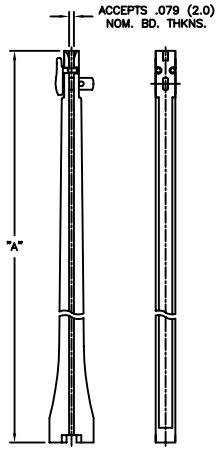

FIG. #1 (BASE)

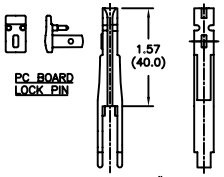

FIG. #3 (EXTENSION)

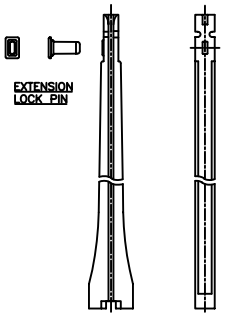

FIG. #2 (BASE)

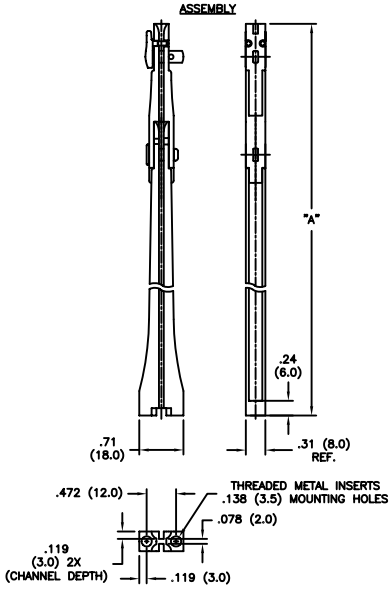

NOTES:
1. CARD GUIDE MATERIAL: FLAME RETARDANT POLYSTYRENE (RMS-117).
2. CARD GUIDE COLOR: BLUE.
3. LOCKING SYSTEM COLOR: WHITE (LSWT).
4. CARD GUIDE WITH M3 INSERTS IS SUPPLIED WITH HARDWARE KIT, SUFFIX "-K" , (WASHER, LOCK WASHER & M3X8 SCREW).
5. CARD GUIDE WITH 4/40 INSERTS IS NOT SUPPLIED WITH HARDWARE.
6. COMPONENTS:

A) LOCKING BUTTON: POLYOLEFIN (RMS-288)
B) SCREW: STAINLESS STEEL (RMS-228)
C) THREADED INSERT: BRASS (RMS-231)
D) WASHER: STAINLESS STEEL (RMS-228)

REV	DESCRIPTION	ENGR	DATE
B	SEE ECN #1285 FOR CHANGES	SK	02.12.07
A	SEE ECN #518 FOR CHANGES	SM	11/12/02

TITLE: VERTICAL MOUNT CARD GUIDE

DWG IN IN (MM)

TOLERANCES UNLESS NOTED
.XX=±.010
.XXX=±.005
FRAC=±1/64
ANG=1°

FILE # VMCGN
MAT'L: SEE NOTES
RE: RICHCO, INC.

DWN: R.D.G.
DT: 03/13/01
APP:
DT:

RICHCO INC.
PO BOX 804238,CHICAGO,60680
(773) 539-4060

FINAL

PART # SEE TABLE

PRINT TYPE CA