THIS DRAWING IS UNPUBLISHED. RELEASED FOR PUBLICATION 1999
© COPYRIGHT 1999 - ALL RIGHTS RESERVED.

LOC	DIST
AD	00

REVISIONS

P	LTR	DESCRIPTION	DATE	DWN	APVD
	B	REVISED PER ECO-12-006972	23AUG2012	KH	JE

2. PHOSPHOR BRONZE
3. LCP, UL94V-0
4. FINISH:
   CONTACT MATING AREA MEETS THE PERFORMANCE REQUIREMENTS OF TE CONNECTIVITY PRODUCT SPECIFICATION 108-1957; BASED ON TELCORDIA GR-1217-CORE, APPLICATIONS IN UNCONTROLLED ENVIRONMENTS. COMPLIANT PIN AREA: 0.5µm MIN MATTE TIN OVER BASE PLATING.
5. CONNECTOR MARKED WITH PART NUMBER AND DATE CODE
6. REFERENCE APPLICATION SPEC 114-13020 FOR RECOMMENDED PLATED THRU HOLE DIAMETER AND PLATING THICKNESS.
7. APPLICATION SEATING HEIGHT TO PRINTED CIRCUIT BOARD
8. DATUMS AND BASIC DIMENSIONS ESTABLISHED BY CUSTOMER
9. CONTACT AREA LUBRICATED WITH BELLCORE APPROVED LUBRICANT TECHNICAL REFERENCE: GR-1217-CORE, ISSUE 1, NOVEMBER 1995

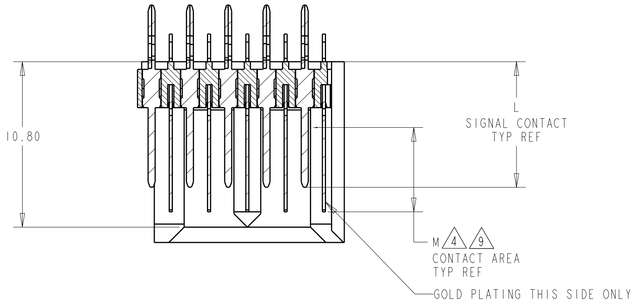

SECTION B-B

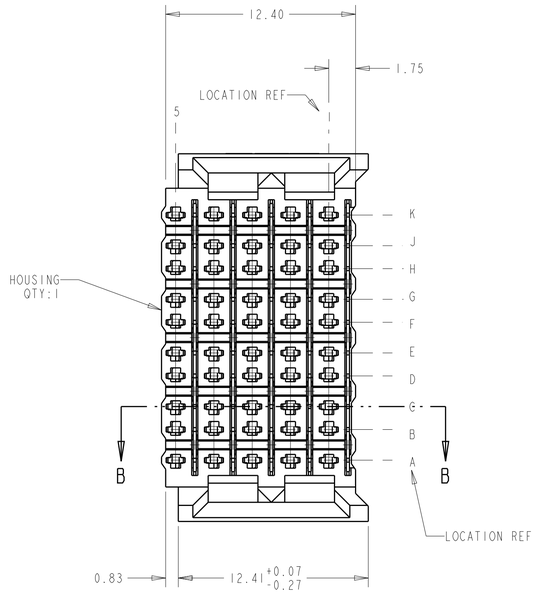

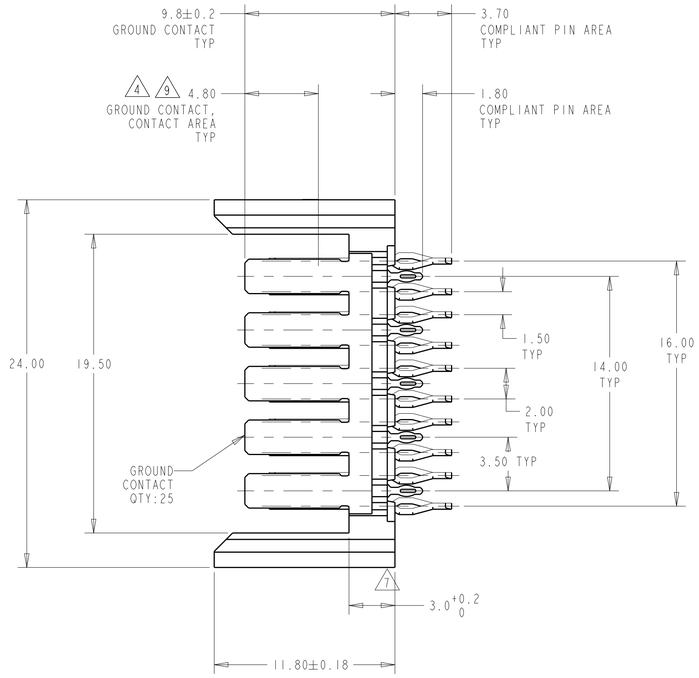

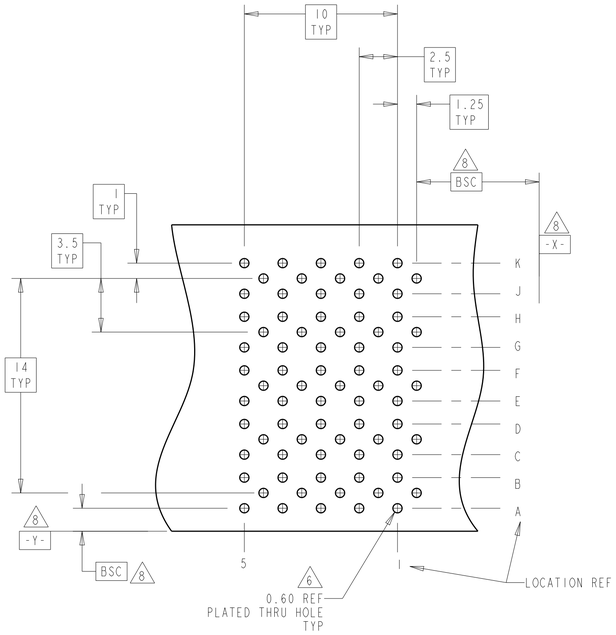

RECOMMENDED
PRINTED CIRCUIT BOARD
LAYOUT
COMPONENT SIDE OF PRINTED CIRCUIT BOARD

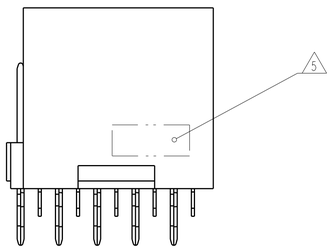

M	L	PART NUMBER
5.50	9.7	5120747-2
5.50	8.2	5120747-1

THIS DRAWING IS A CONTROLLED DOCUMENT.

DIMENSIONS: mm

TOLERANCES UNLESS OTHERWISE SPECIFIED:
0 PLC ±-
1 PLC ±-
2 PLC ±0.13
3 PLC ±0.05
4 PLC ±-
ANGLES ±-

MATERIAL
HOUSING: 3
CONTACTS: 2
FINISH -
SIGNAL CONTACT: 4

DWN B.CARBO 07DEC04
CHK R.PATTERSON 07DEC04
APVD R.PATTERSON 07DEC04
PRODUCT SPEC -
APPLICATION SPEC -
WEIGHT -

TE Connectivity

NAME HEADER ASSEMBLY, 50 POSITION, 10 ROW, BACKPLANE CONNECTOR, Z-PACK HS3

SIZE	CAGE CODE	DRAWING NO	RESTRICTED TO
A1	00779	C-5120747	-

CUSTOMER DRAWING

SCALE	SHEET	OF	REV
5:1	1	1	B