THIS DRAWING IS UNPUBLISHED. RELEASED FOR PUBLICATION ,19 .
© COPYRIGHT 19 BY AMP INCORPORATED. ALL RIGHTS RESERVED.

LOC	DIST
G	14

REVISIONS

P	LTR	DESCRIPTION	DATE	DWN	APVD
	0	PR 97-120	18NOV97	LO	BB

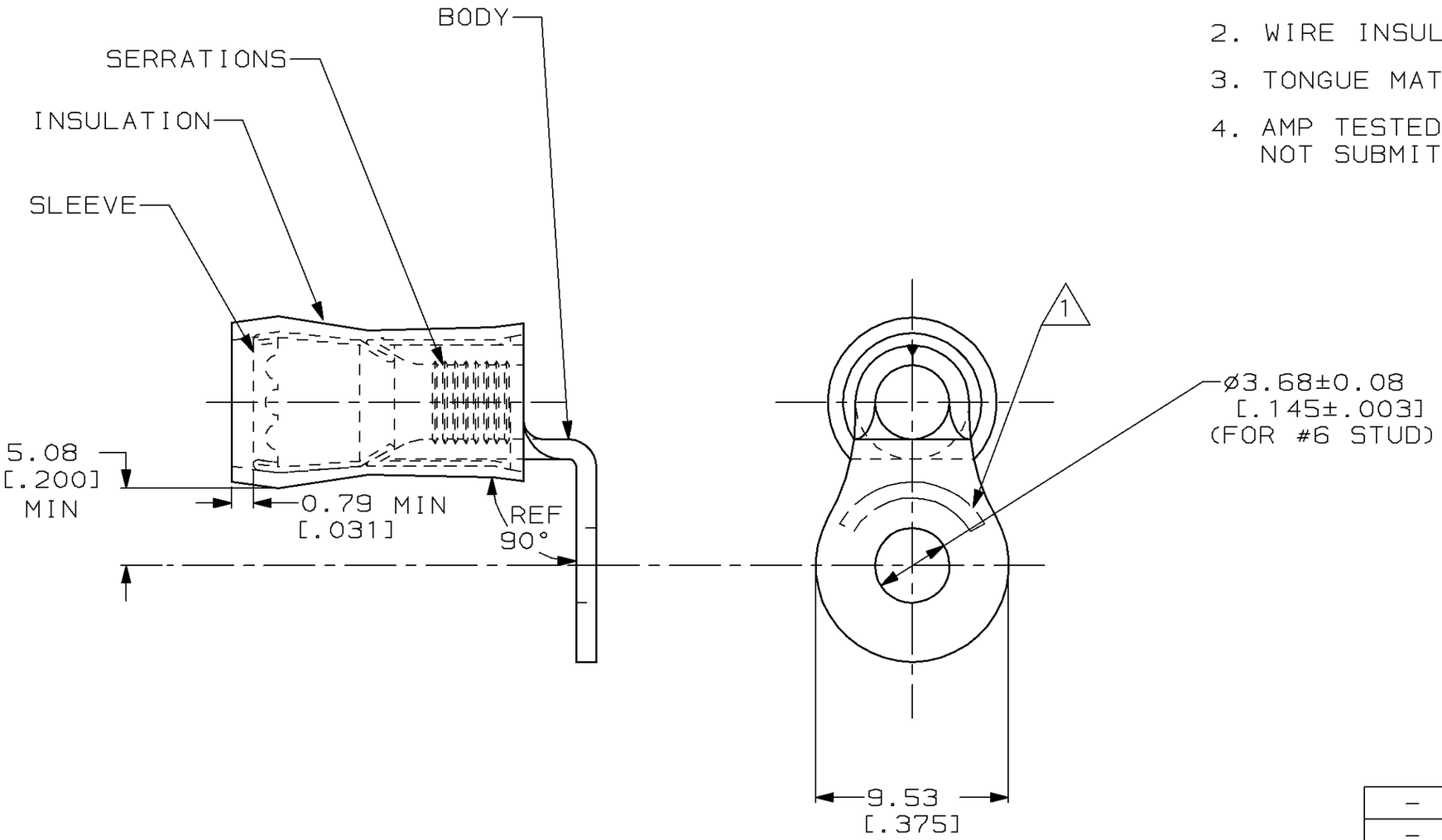

1. STAMP AMP 12-10* APPROX AS SHOWN
2. WIRE INSUL DIA, 3.81-6.35 [.150-.250]
3. TONGUE MATL THK, 1.02±0.05 [.040±.002]
4. AMP TESTED AND CONFORMS TO UL486A BUT NOT SUBMITTED TO UL™ FOR APPROVAL

QTY	PACKAGE TYPE	PART NO
–	–	–
–	–	–
500	LOOSE PIECE	696020-1

AMP INCORPORATED
CUSTOMER SERVICE SYSTEM

FOR ADDITIONAL PRODUCT INFORMATION OR COPIES OF DRAWINGS AND TECHNICAL DOCUMENTS	PRODUCT INFORMATION CENTER 1-800-522-6752
FOR APPLICATION TOOLING INFORMATION	TOOLING ASSISTANCE CENTER 1-800-722-1111
FOR ORDER ENTRY	1-800-526-5142

MAX RECOMMENDED OPERATING TEMPERATURE: 105°C[221°F]

VOLTAGE RATING: 300 VOLT MAX
–

CIRCULAR MIL AREA: 2.62mm²-6.64mm² [5,180-13,100]

THIS DRAWING IS A CONTROLLED DOCUMENT FOR AMP INCORPORATED. IT IS SUBJECT TO CHANGE AND THE CONTROLLING ENGINEERING ORGANIZATION SHOULD BE CONTACTED FOR THE LATEST REVISION.

DIMENSIONS: mm [in]

TOLERANCES UNLESS OTHERWISE SPECIFIED:
0 PLC ±–
1 PLC ±–
2 PLC ±0.20 [.008]
3 PLC ±–
4 PLC ±–
ANGLES ±–

MATERIAL
BODY & SLEEVE: CU PER ASTM B-152
INSUL, NYLON, COLOR, YELLOW

FINISH
BODY & SLEEVE: TIN PLATE PER ASTM B-545

DWN	L OLMEDA	18NOV97
CHK	M ELLIS	18NOV97
APVD	T MICHIELUTTI	18NOV97
PRODUCT SPEC	–	
APPLICATION SPEC	–	
WEIGHT	–	

CUSTOMER DRAWING

AMP Incorporated
Harrisburg, PA 17105-3608

NAME
TERMINAL, RING TONGUE, PIDG™ WIRE SIZE, 12-10, 90°

SIZE	CAGE CODE	DRAWING NO
A3	00779	C-696020

SCALE	SHEET	REV
6:1	1 OF 1	0

AMP 1470-19 REV 09MAY94