THIS DRAWING IS UNPUBLISHED. RELEASED FOR PUBLICATION 20
© COPYRIGHT 20 BY TYCO ELECTRONICS CORPORATION. ALL RIGHTS RESERVED.

LOC	DIST
GP	00

REVISIONS

P	LTR	DESCRIPTION	DATE	DWN	APVD
	A	RELEASED	12NOV2007	BC	DD
	A1	REVISED PER ECO-08-007613	29MAY2008	DH	DD

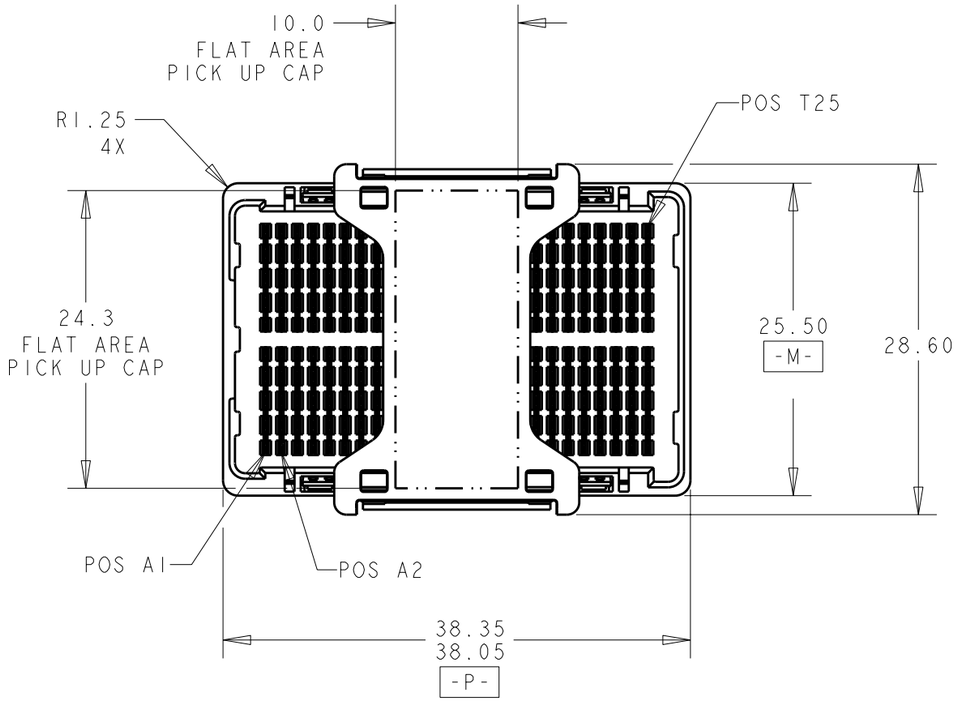

TYPICAL ASSEMBLY

15mm SHOWN
SCALE 2:1

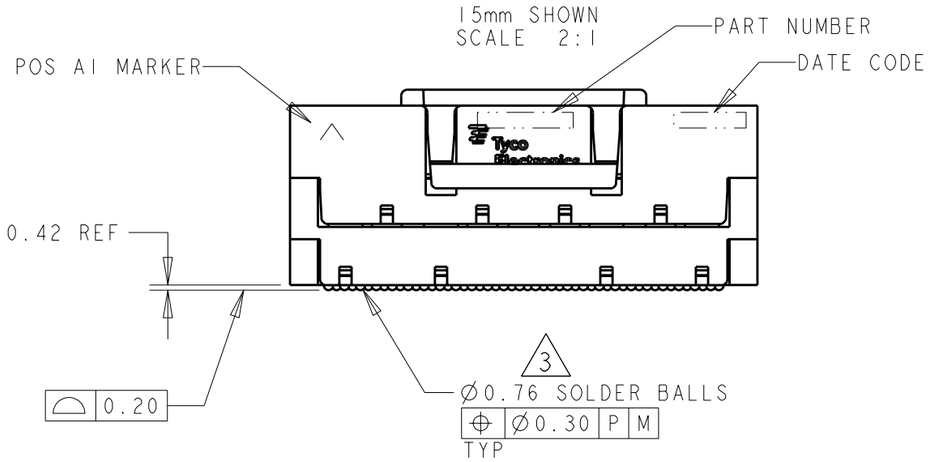

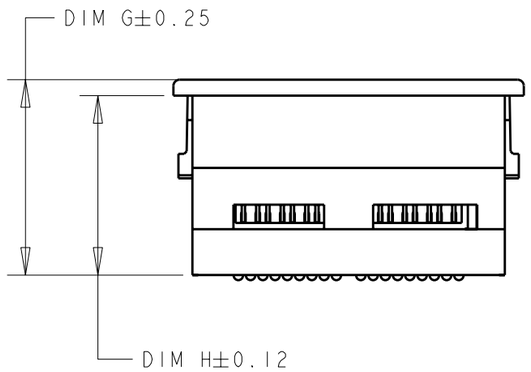

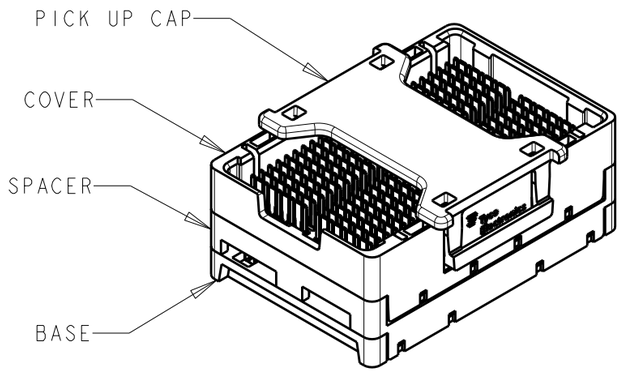

ISOMETRIC VIEW

TYPICAL CONFIGURATION FOR
15mm & 20mm ASSEMBLY
SCALE 3:2

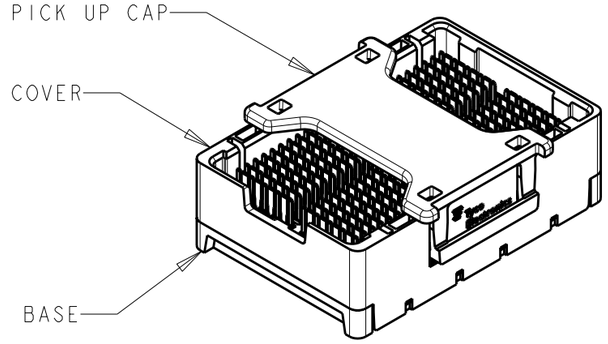

ISOMETRIC VIEW

TYPICAL CONFIGURATION FOR
10mm, 12mm, & 13mm ASSEMBLY
SCALE 3:2

THIS DRAWING IS A CONTROLLED DOCUMENT FOR TYCO ELECTRONICS CORPORATION. IT IS SUBJECT TO CHANGE AND THE CONTROLLING ENGINEERING ORGANIZATION SHOULD BE CONTACTED FOR THE LATEST REVISION.

DIMENSIONS: mm

TOLERANCES UNLESS OTHERWISE SPECIFIED:

0 PLC	±-
1 PLC	±0.3
2 PLC	±0.10
3 PLC	±0.050
4 PLC	±-
ANGLES	±2°

MATERIAL - 1

FINISH - 2

DWN	B.CARBO	12NOV2007
CHK	D.DIXON	12NOV2007
APVD	D.DIXON	12NOV2007

PRODUCT SPEC: 108-2143

APPLICATION SPEC: 114-13101

WEIGHT: -

CUSTOMER DRAWING

Tyco Electronics
Tyco Electronics
Harrisburg, PA 17105-3608

NAME: STEP-Z, PLUG ASSEMBLY, 200 SIGNAL POSITION
-

SIZE	CAGE CODE	DRAWING NO	RESTRICTED TO
A3	00779	C-2007614	-

SCALE - | SHEET 1 OF 4 | REV A1

AMP 1470-19 REV 31MAR2000

Pro/ENGINEER DRAWING

THIS DRAWING IS UNPUBLISHED. RELEASED FOR PUBLICATION 20
© COPYRIGHT 20 BY TYCO ELECTRONICS CORPORATION. ALL RIGHTS RESERVED.

LOC	DIST
GP	00

REVISIONS

P	LTR	DESCRIPTION	DATE	DWN	APVD
	-	SEE SHEET 1	-	-	-

1. MATERIAL:
   BASE, SPACER, COVER: THERMOPLASTIC
   PICK UP CAP: THERMOPLASTIC
   CONTACT: COPPER ALLOY
   SOLDER BALL: Sn/Pb FOR P/N 1761614-1 THRU 5-1761614-0
   Sn/Ag FOR P/N 5-1761614-1 THRU 9-1761614-9

2. FINISH:
   CONTACT: 0.00076 MIN GOLD OVER 0.00127 MIN NICKEL.
   (30µ" MIN GOLD OVER 50µ" MIN NICKEL)

3. SOLDER BALLS WILL NOT BE PERFECT SPHERICAL SHAPE DUE TO REFLOW ATTACHMENT.

4. CONTACTS IN ROWS A,C,E,G,J,K,M,P,R, AND T ARE SINGLE BEAM CONTACTS, TYPICALLY USED AS GROUND PINS. (NOTE: CONTACTS IN ROW J & K ARE TIED TOGETHER [COMMONED]).

5. CONTACTS IN ROWS B,D,F,H,L,N,Q, AND S ARE DUAL BEAM CONTACTS, TYPICALLY USED AS SIGNAL PINS.

6. SPECIFIED POSITIONAL TOLERANCE DEFINES PAD TO PAD LOCATION WITHIN LAND PATTERN. POSITIONAL TOLERANCE OF LAND PATTERN TO FUDICIAL MARKS OR PCB DATUMS SHALL BE DEFINED BY CUSTOMER. FOR RECOMMENDED PRODUCT APPLICATION AND PCB DESIGN DETAILS, SEE APPLICATION SPEC 114-13101.

7. -

8. REFERENCE BOARD PATTERN FOR DIMENSIONS AND DETAILS NOT SHOWN.

9. HARD BLACK PLASTIC JEDEC STYLE TRAY.

10. PACKAGING:
    28 CONNECTORS PER TRAY.
    8 TRAYS PER SHIPPING BOX.
    SOLD ONLIN BOX QUANTITIES (224).
    AVAILABLE IN SINGLE SOFT CLEAR TRAY QUANTITY (25) AS X-1761614-X (SAME DASH NUMBERS).

11. ANTISTATIC MATERIAL.

12. CONNECTOR ORIENTATION:
    POSITION A1 IN UPPER RIGHT CORNER.

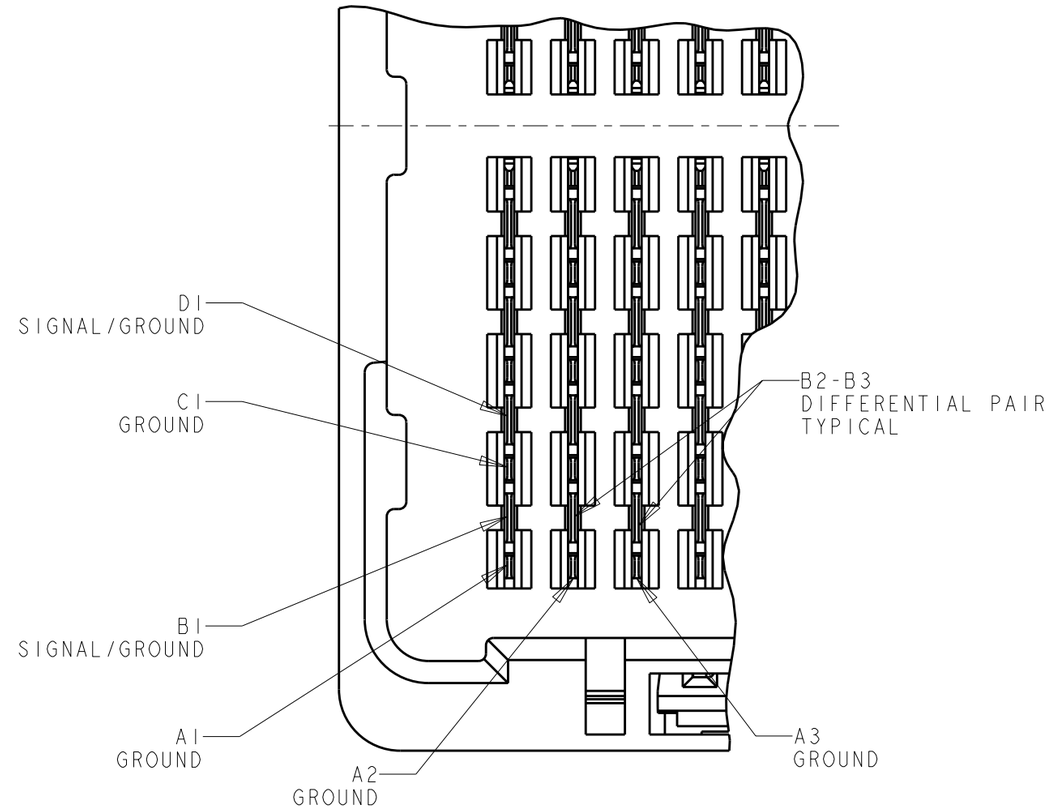

PLUG INTERFACE
SCALE 8:1

TRAY COLOR	DIM T	DIM H	DIM G	LOAD STYLE	DESCRIPTION	PART NUMBER
BLUE	16.3	14.65	15.95	FULL LOAD-200	15mm Sn/Ag	6-2007614-5
BLUE	26.3	24.65	25.95	FULL LOAD-200 POSN	25mm Sn/Ag	7-2007614-5
BLUE	11.3	9.65	10.95	FULL LOAD-200 POSN	10mm Sn/Ag	6-2007614-0
BLACK	16.3	14.65	15.95	FULL LOAD-200 POSN	15mm Sn/Pb	1-2007615-5
BLACK	26.3	24.65	25.95	FULL LOAD-200 POSN	25mm Sn/Pb	2-2007614-5
BLACK	11.3	9.65	10.95	FULL LOAD-200 POSN	10mm Sn/Pb	1-2007614-0

THIS DRAWING IS A CONTROLLED DOCUMENT FOR TYCO ELECTRONICS CORPORATION. IT IS SUBJECT TO CHANGE AND THE CONTROLLING ENGINEERING ORGANIZATION SHOULD BE CONTACTED FOR THE LATEST REVISION.

DIMENSIONS: mm

TOLERANCES UNLESS OTHERWISE SPECIFIED:
0 PLC ±-
1 PLC ±0.3
2 PLC ±0.10
3 PLC ±0.050
4 PLC ±-
ANGLES ±2°

MATERIAL -
FINISH -

DWN B.CARBO 12NOV2007
CHK D.DIXON 12NOV2007
APVD D.DIXON 12NOV2007
PRODUCT SPEC 108-2143
APPLICATION SPEC 114-13101
WEIGHT -

Tyco Electronics
Tyco Electronics
Harrisburg, PA 17105-3608

NAME
STEP-Z, PLUG ASSEMBLY,
200 SIGNAL POSITION
-

SIZE	CAGE CODE	DRAWING NO	RESTRICTED TO
A3	00779	C-2007614	-

CUSTOMER DRAWING | SCALE - | SHEET 2 OF 4 | REV A1

THIS DRAWING IS UNPUBLISHED. RELEASED FOR PUBLICATION 20
© COPYRIGHT 20 BY TYCO ELECTRONICS CORPORATION. ALL RIGHTS RESERVED.

LOC	DIST
GP	00

REVISIONS

P	LTR	DESCRIPTION	DATE	DWN	APVD
	-	SEE SHEET 1	-	-	-

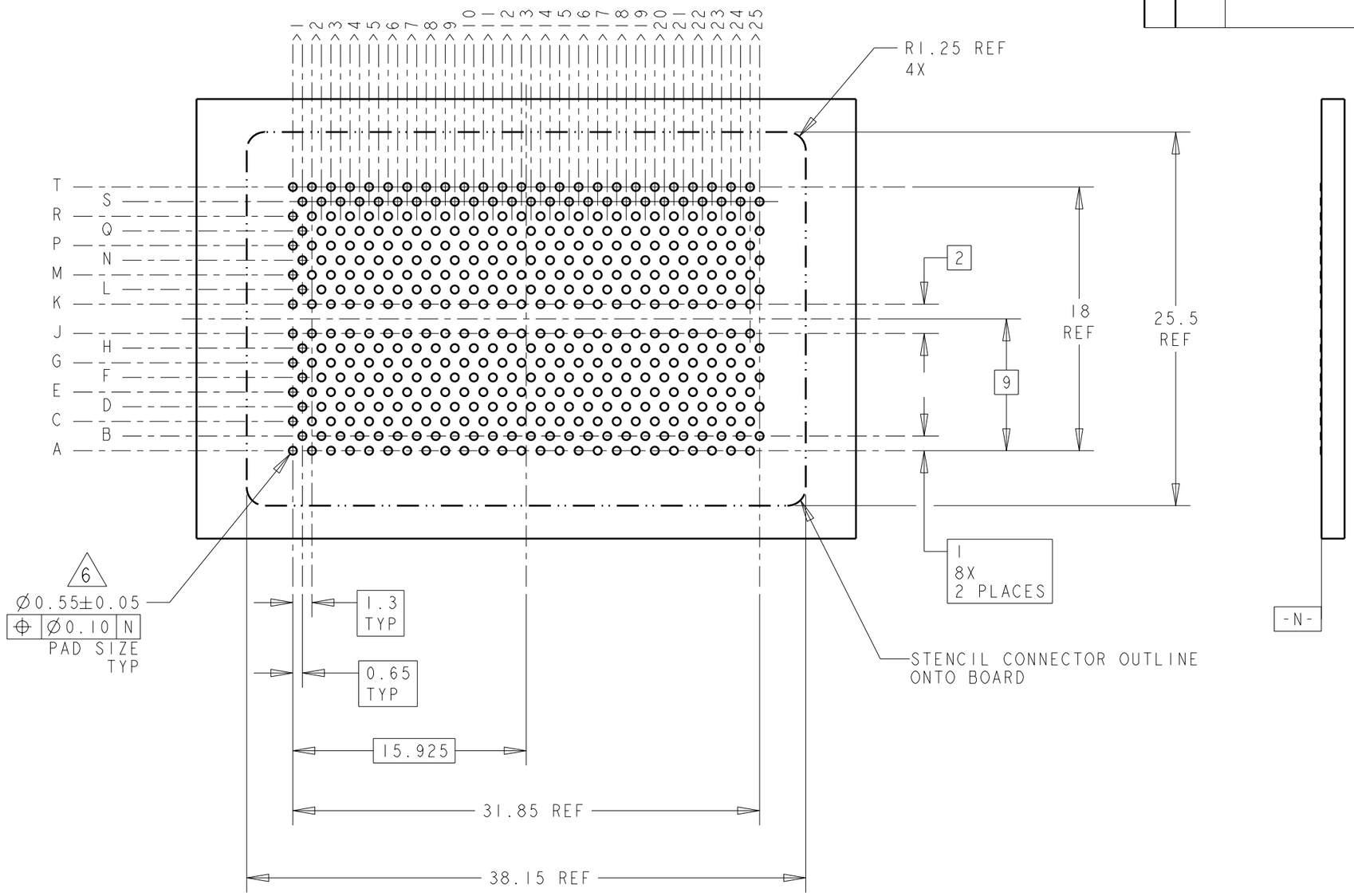

4 5 **BOARD PATTERN**
SCALE 3:1

THIS DRAWING IS A CONTROLLED DOCUMENT FOR TYCO ELECTRONICS CORPORATION. IT IS SUBJECT TO CHANGE AND THE CONTROLLING ENGINEERING ORGANIZATION SHOULD BE CONTACTED FOR THE LATEST REVISION.

DIMENSIONS: mm

TOLERANCES UNLESS OTHERWISE SPECIFIED:

0 PLC	±-
1 PLC	±0.3
2 PLC	±0.10
3 PLC	±0.050
4 PLC	±-
ANGLES	±2°

MATERIAL -
FINISH -

DWN	B.CARBO	12NOV2007
CHK	D.DIXON	12NOV2007
APVD	D.DIXON	12NOV2007

PRODUCT SPEC 108-2143
APPLICATION SPEC 114-13101
WEIGHT -

Tyco Electronics
Tyco Electronics
Harrisburg, PA 17105-3608

NAME
STEP-Z, PLUG ASSEMBLY,
200 SIGNAL POSITION
-

SIZE	CAGE CODE	DRAWING NO	RESTRICTED TO
A3	00779	C-2007614	-

CUSTOMER DRAWING | SCALE - | SHEET 3 OF 4 | REV A1

THIS DRAWING IS UNPUBLISHED. RELEASED FOR PUBLICATION 20
© COPYRIGHT 20 BY TYCO ELECTRONICS CORPORATION. ALL RIGHTS RESERVED.

LOC	DIST
GP	00

REVISIONS

P	LTR	DESCRIPTION	DATE	DWN	APVD
	-	SEE SHEET 1	-	-	-

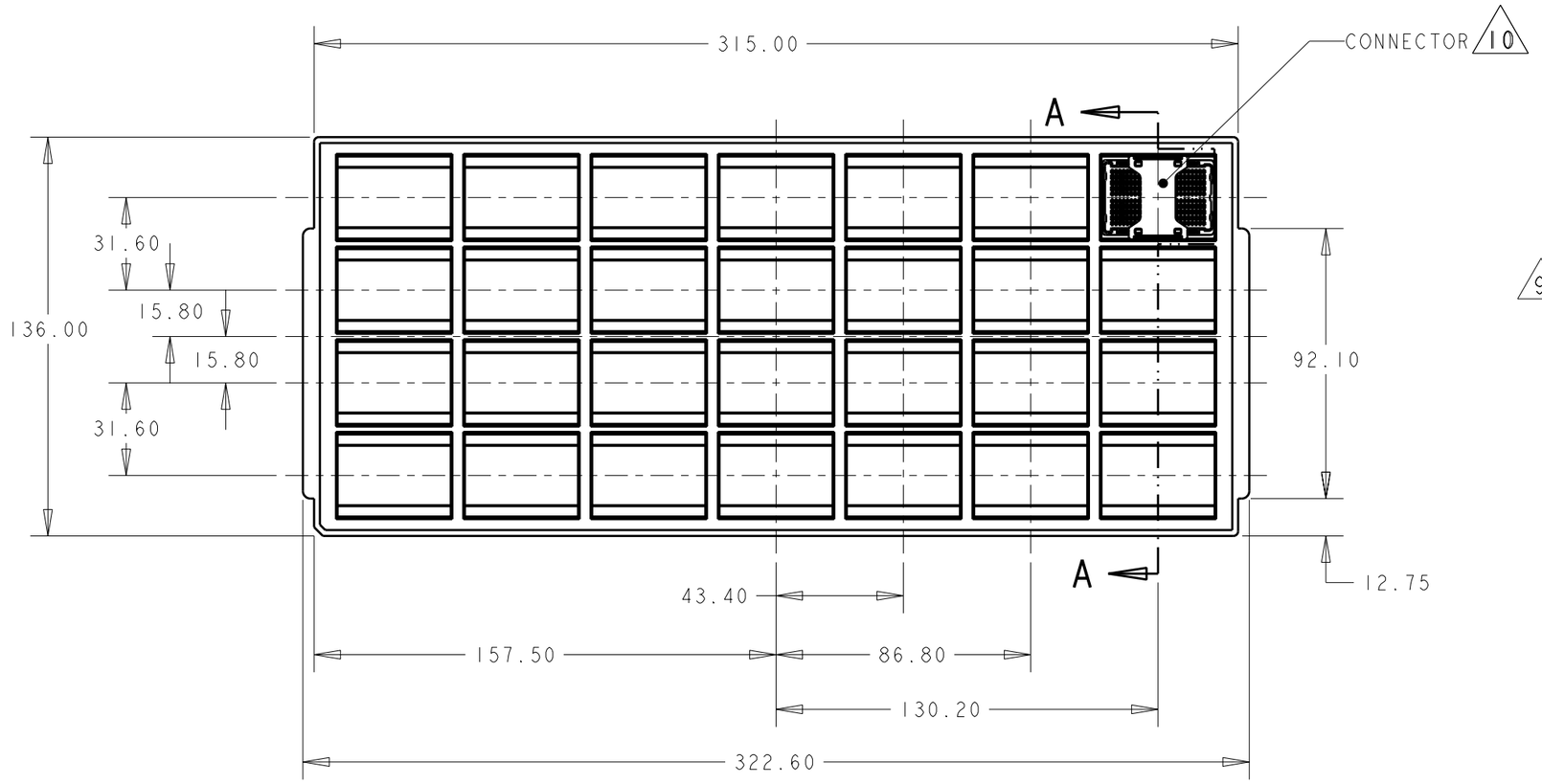

SCALE 1:2

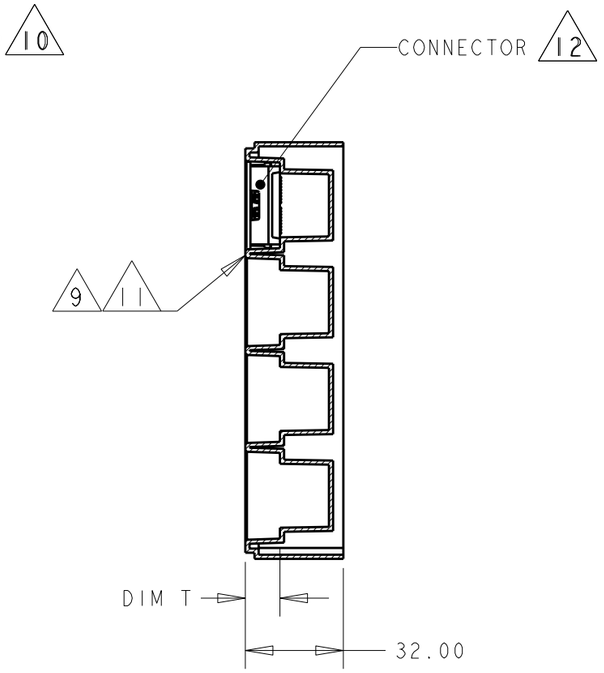

SECTION A-A

THIS DRAWING IS A CONTROLLED DOCUMENT FOR TYCO ELECTRONICS CORPORATION IT IS SUBJECT TO CHANGE AND THE CONTROLLING ENGINEERING ORGANIZATION SHOULD BE CONTACTED FOR THE LATEST REVISION.

DIMENSIONS: mm

TOLERANCES UNLESS OTHERWISE SPECIFIED:

0 PLC	±-
1 PLC	±0.3
2 PLC	±0.10
3 PLC	±0.050
4 PLC	±-
ANGLES	±2°

MATERIAL -

FINISH -

DWN	B.CARBO	12NOV2007
CHK	D.DIXON	12NOV2007
APVD	D.DIXON	12NOV2007

PRODUCT SPEC 108-2143

APPLICATION SPEC 114-13101

WEIGHT -

CUSTOMER DRAWING

Tyco Electronics

Tyco Electronics
Harrisburg, PA 17105-3608

NAME STEP-Z, PLUG ASSEMBLY, 200 SIGNAL POSITION
-

SIZE	CAGE CODE	DRAWING NO	RESTRICTED TO
A3	00779	C-2007614	-

SCALE	SHEET	REV
-	4 OF 4	A1

AMP 1470-19 REV 31MAR2000