REV.	DESCRIPTION	DATE
A	RELEASE	2012.11.12

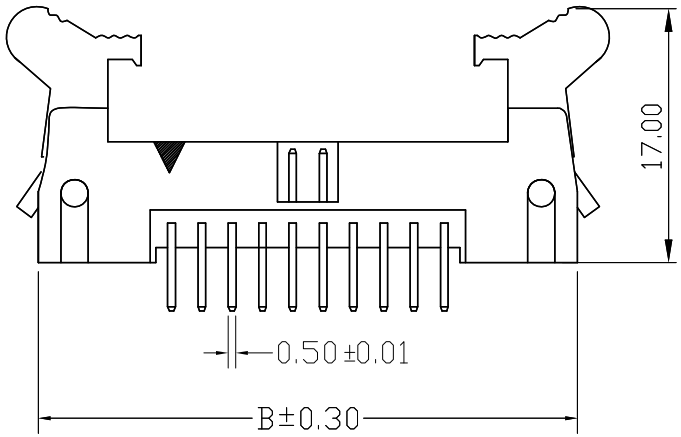

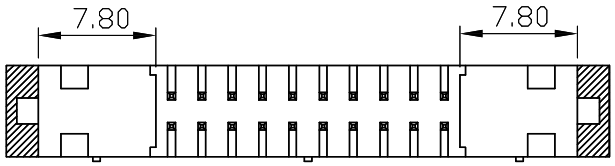

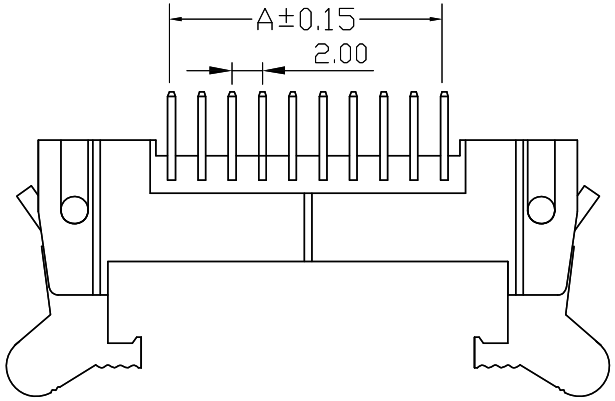

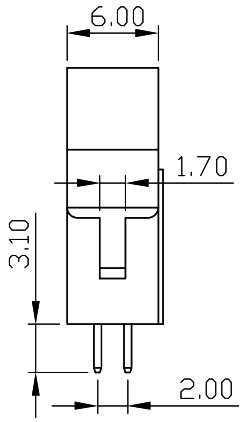

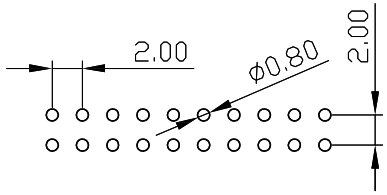

NOTES:
Insulator Material: PBT, UL 94V-0
Contact Plating: Flash Gold
Contact Material: Brass

Current Rating : 1A AC,DC
Contact Resistance: 20MΩ Max.
Dielectric Withstanding: AC 500V
Insulator Resistance: 1000MΩ Min.
Operating Temp.: -40°C~+105°C

NUMBER OF POSITIONS	DIMENSIONS	
	A	B
06	4.00	21.60
08	6.00	23.60
10	8.00	25.60
12	10.00	27.60
14	12.00	29.60
16	14.00	31.60
20	18.00	35.60
24	22.00	39.60
26	24.00	41.60
30	28.00	45.60
34	32.00	49.60
40	38.00	55.60
44	42.00	59.60
50	48.00	65.60
60	58.00	75.60

RoHS

UNLESS TOLERANCE			
GENERAL		ANGLE	
X.	± 0.30	X.°	± 3.0°
.X	± 0.20	.X°	± 2.0°
.XX	± 0.15	.XX°	± 1.0°
.XXX	± 0.08	.XXX°	± 0.5°

DRAW BY	
DESIGN BY	
CHECK BY	
APPROVE BY	

SCALE	SHEET	UNIT
1:1	1/1	MM

CnC Tech,LLC

Part NO.
3110-XX-001-12-00

DRW NO:

REV: A