THIS DRAWING IS UNPUBLISHED. RELEASED FOR PUBLICATION - -, .
© COPYRIGHT - By - ALL RIGHTS RESERVED.

LOC	DIST
FT	0

REVISIONS

P	LTR	DESCRIPTION	DATE	DWN	APVD
	G2	REVISED PER ECO-11-004820	11MAR11	RK	HMR

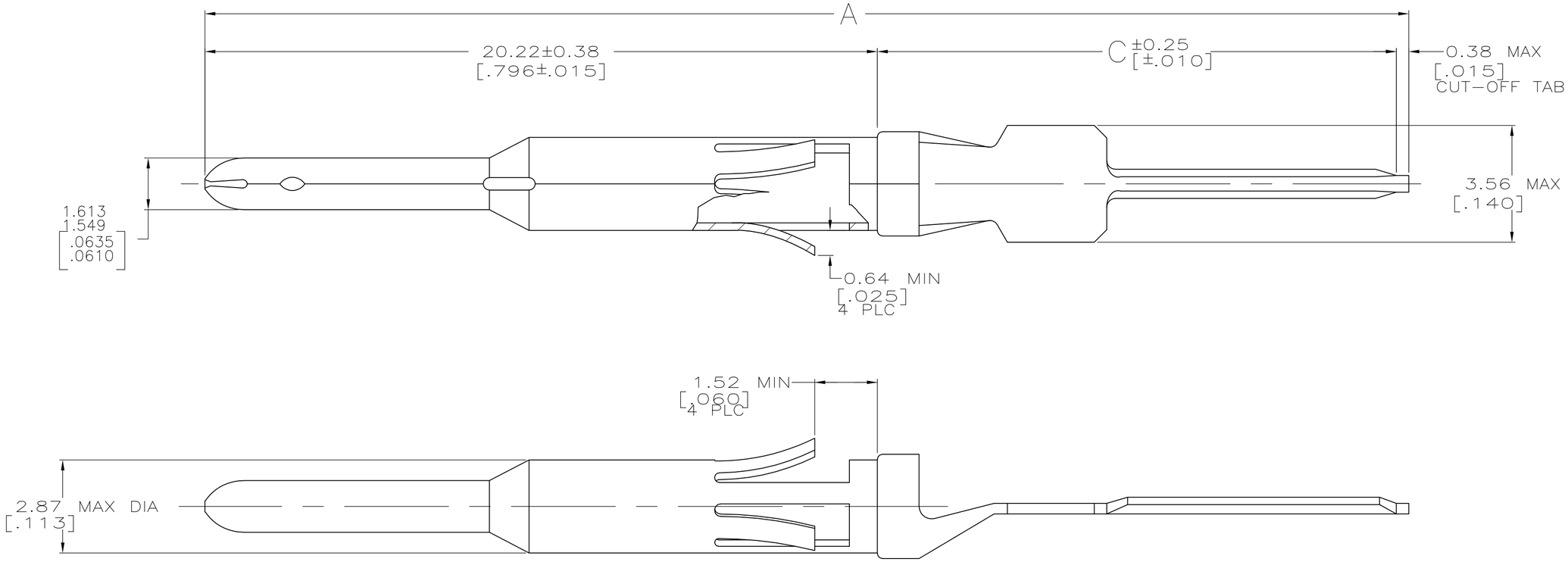

5 OBSOLETE	25.91 [1.020]	46.51 [1.831]	2-66730-1
5 OBSOLETE	21.11 [.831]	41.71 [1.642]	1-66730-9
5 OBSOLETE	15.80 [.622]	36.40 [1.433]	1-66730-7
	25.91 [1.020]	46.51 [1.831]	66730-9
	21.11 [.831]	41.71 [1.642]	66730-6
	15.80 [.622]	36.40 [1.433]	66730-3
	C	A	PART NUMBER

1. BRASS PER MIL-C-50.
2. 0.76um [.000030] MIN GOLD FOR A LENGTH OF 3.81 [.150] MIN ON CONTACT END, 1.27um [.000050] MIN TIN-LEAD ON OPPOSITE END, BOTH OVER 1.27um [.000050] MIN NICKEL ON ENTIRE CONTACT.
3. GOLD PLATING PER MIL-G-45204; TIN PLATING PER MIL-T-10727; NICKEL PLATING PER QQ-N-290.
4. 0.76um [.000030] MIN GOLD FOR A LENGTH OF 3.81 [.150] MIN ON CONTACT END, 1.27um [.000050] MIN TIN ON OPPOSITE END, BOTH OVER 1.27um [.000050] MIN NICKEL ON ENTIRE CONTACT.
5. OBSOLETE PARTS: OBSOLETE CIS STREAMLINING PER D.RENAUD/D.SINISI

THIS DRAWING IS A CONTROLLED DOCUMENT.

DIMENSIONS: mm [INCHES]

TOLERANCES UNLESS OTHERWISE SPECIFIED:
0 PLC ± -
1 PLC ± -
2 PLC ± 0.13 [.005]
3 PLC ± -
4 PLC ± -
ANGLES ± -

MATERIAL 1
FINISH 2

DWN L.SIPE 07/09/92
CHK R.STONE 7-10-92
APVD -
PRODUCT SPEC -
APPLICATION SPEC -
WEIGHT -

TE Connectivity

NAME CONTACT, PIN, TYPE VI, POSTED

SIZE	CAGE CODE	DRAWING NO	RESTRICTED TO
A2	00779	C-66730	-

CUSTOMER DRAWING | SCALE 10:1 | SHEET 1 OF 1 | REV G2

66730

1471-9 (3/11)