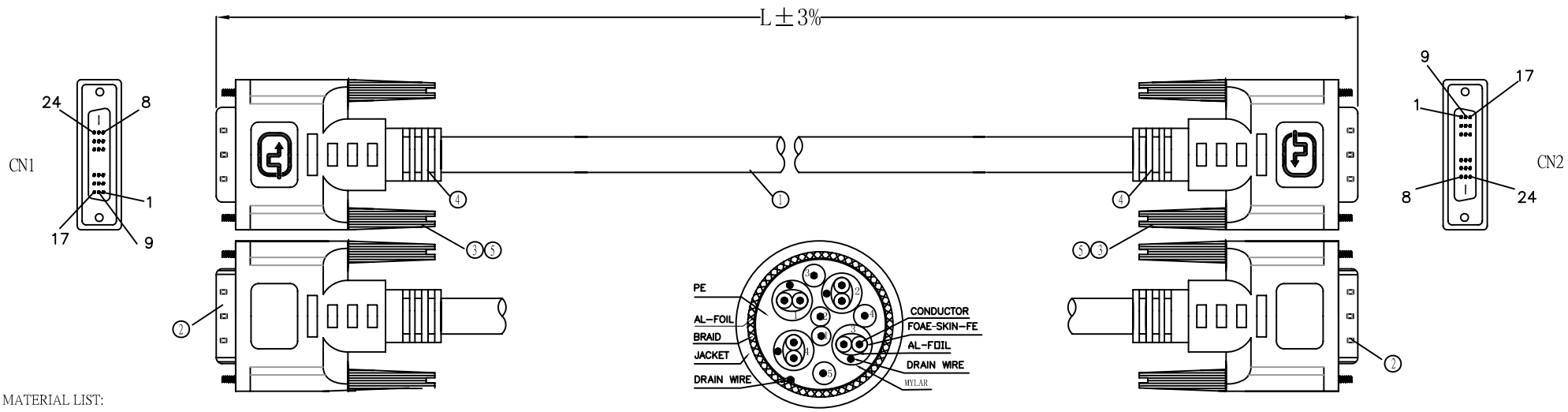

MATERIAL LIST:

NO.	PARTS NAME	SPECIFICATION DESCRIPTION
①	CABLE	UL20276 4*(1P*30AWG+AL+D+MYLAR)+5C*30AWG+AL+D+B (60%) OD:6.0±0.2mm COLOR:BLACK
②	DVI CONNECTOR	DVI 18+1 MALE INSULATOR BLACK SOLDER TYPE PIN GOLD PLATED 1u" GOLD PLATED SHELL
③	SCREW	Ø4*47mm NICKEL PLATED
④	MOLDING PVC	MOLDING PVC 063 45P COLOR:BLACK
⑤	MOLDING PVC	MOLDING PVC 063 30P COLOR:BLACK

Marking: Maxxtro UL C UL AWM E200765 STYLE 20276 80℃ 30V FT2

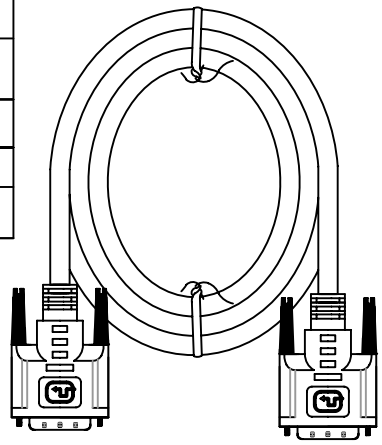

PIN OUT

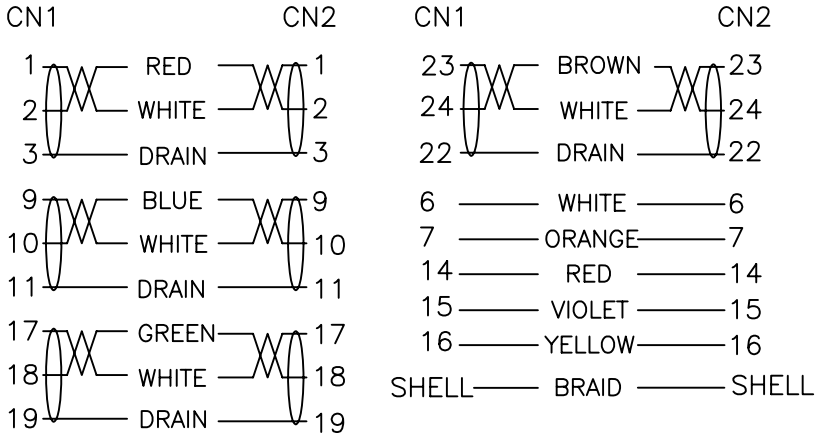

ITEM NO	LENGTH	PVC COLOR	PACKING
103070	1800±50mm	BLACK 0020	BLISTER CARD

ELECTRONIC TEST:

A.OPEN/SHORT/INTERMITTENCE: 100%.

B.HI-POT: 300V DC/sec

C.INSULATION RESISTANCE: 10M ohm (MIN)

D.CONDUCTIVE RESISTANCE: 5ohm (MAX)

REMARK	NO	CHA.NO	SIGNATURE	DATE
DRAWN BY	RENZHI			
CHECKED BY				
AUDITED BY		APPROVED BY		
CRAFT		DATE	2011.03.29	

SIGN | W.T | SCALE

PAGE OF

Maxxtro®

ITEM NO. (SECTION SHEET)