THIS DRAWING IS UNPUBLISHED. RELEASED FOR PUBLICATION -,- .
© COPYRIGHT - By - ALL RIGHTS RESERVED.

LOC	DIST
AF	50

REVISIONS

P	LTR	DESCRIPTION	DATE	DWN	APVD
	F	REVISED PER ECR-12-013459	28NOV2012	KH	PD

1 CONTINUOUS STRIP ON REELS.

2 MATING TAB THK IS 0.51±0.025 [.020±.001].

3 WIRE SIZE IS #[20-16] AWG

4 INSULATION RANGE IS 2.79-4.32 [.110-.170] DIA.

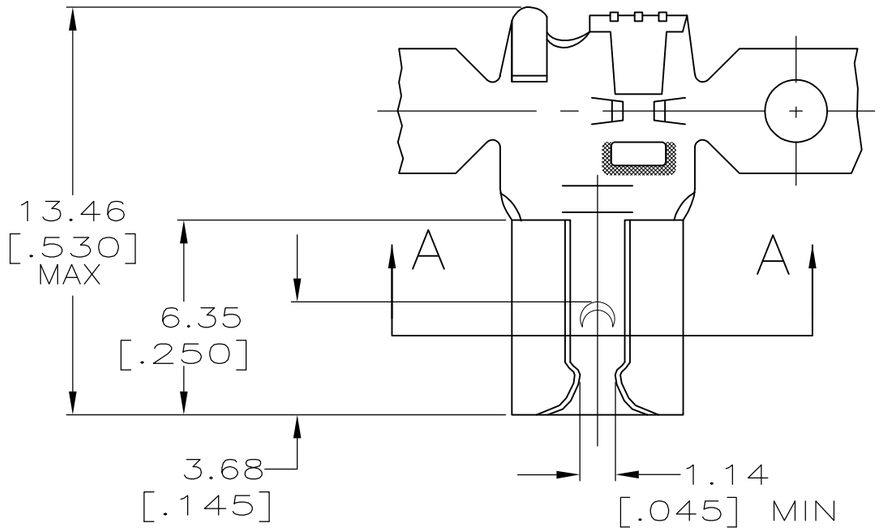

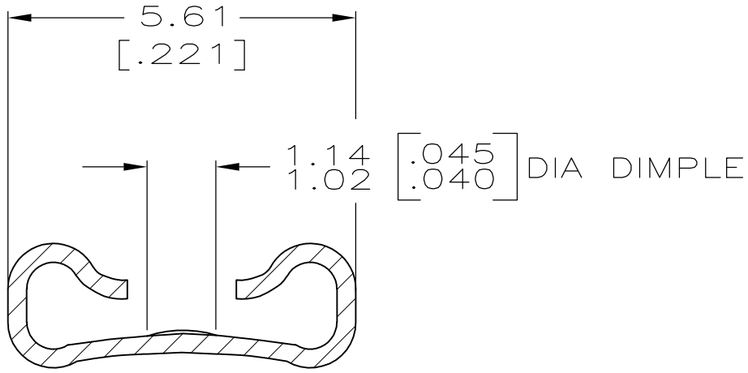

SECTION A-A
SCALE 10:1

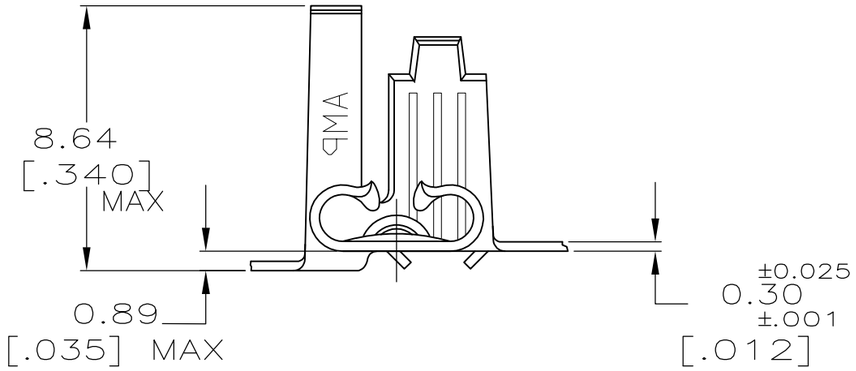

TIN	61029-2
-	61029-1
FINISH	PART NO.

THIS DRAWING IS A CONTROLLED DOCUMENT.

DIMENSIONS: mm [INCHES]

TOLERANCES UNLESS OTHERWISE SPECIFIED:

0 PLC	± -
1 PLC	± -
2 PLC	± 0.38 [.015]
3 PLC	± -
4 PLC	± -
ANGLES	± -

MATERIAL: BRASS

FINISH: SEE TABLE

DWN	JR RUTH	1/9/97
CHK	MS FEHER	1/9/97
APVD	P DESANTIS	1/9/97
PRODUCT SPEC	—	
APPLICATION SPEC	—	
WEIGHT	—	

TE Connectivity

NAME: RECEPTACLE, FASTON, 4.75 [.187] SERIES
—

SIZE	CAGE CODE	DRAWING NO	RESTRICTED TO
A3	00779	C-61029	—

CUSTOMER DRAWING

SCALE	SHEET	REV
5:1	1 OF 1	F