DWG. NO.
JBXFD0G07MSSDPMRC

THIS DRAWING IS A CONTROLLED DOCUMENT FOR SOURIAU USA, INC.
IT IS SUBJECT TO CHANGE WITHOUT NOTIFICATION.
CONTACT THE ENGINEERING DIVISION, CUSTOMER SERVICE FOR THE LATEST REVISION.

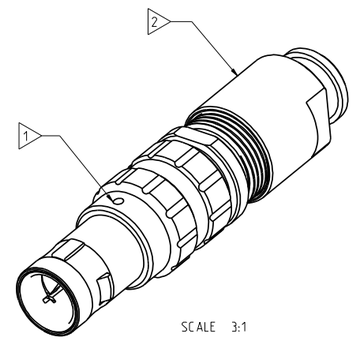

SCALE 3:1

NOTES:

1. RED DOT.

MATERIAL:

OUTER SHELL & COLLET NUT : LATCHING SLEEVE : HALF BUSHES :	BRASS CuZn40Pb3 (C38500/C36000)
PIN CONTACT (SOLDER) :	BRASS CuZn35Pb2 (C35300/C36000)
INSULATOR :	PEEK WITH 15% GLASS FILLED, COLOR BROWN
COLLET :	PA6/6 WITH MoS2, COLOR BLACK

FINISH:

OUTER SHELL & : COLLET NUT	CHROME OVER NICKEL UNDERCOAT
OTHER BRASS PARTS EXCEPT PIN CONTACTS :	NICKEL
PIN CONTACTS :	GOLD AS PER MIL-G-45204C TYPE 1,CLASS 00.

2. CONNECTOR WITH BACKNUT FOR PROTECTIVE BOOT - PROTECTIVE BOOT TO ORDER SEPARATELY.

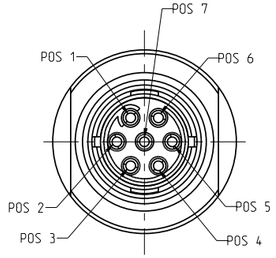

WIRE SIDE VIEW
('COLLET SET' NOT SHOWN)

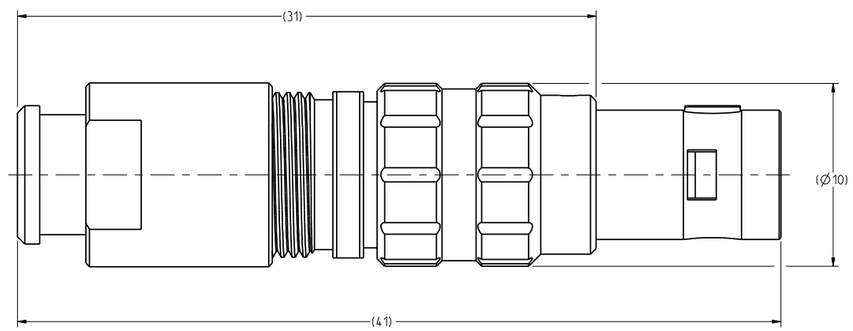

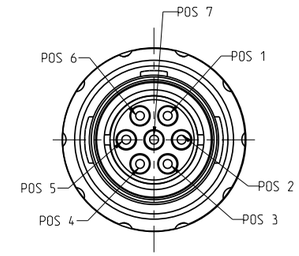

MATING SIDE VIEW

THE INFORMATION CONTAINED IN THIS DRAWING IS CONFIDENTIAL AND MAY NOT BE DISCLOSED WITHOUT WRITTEN CONSENT FROM SOURIAU USA, INC.

REV	DESCRIPTION	BY DATE	CHKD DATE
A	RELEASED PER ECN 11334	SSF 01-18-11	SDH 01-18-11

DRAWING TITLE
JBX, SIZE 0, 07 POSITION, MALE STRAIGHT PLUG

CAT NO.
JBXFD0G07MSSDPMR

CAGE NO: 09922 | SIZE: C

LINEAR MEASURE: mm (INCH)
THIRD ANGLE PROJECTION

TOLERANCES UNLESS OTHERWISE SPECIFIED

No. OF PLACES	mm [INCH]
WHOLE No.	±0.5 [±.02]
ONE PLACE	±0.2 [±.008]
TWO PLACES	±0.1 [±.004]
ANGLES	±1°

CUSTOMER

INTERPRET THIS DRAWING IN ACCORDANCE WITH ASME Y14.5M - 1994.

SOURIAU Connection Technology
www.souriau.com

APPROVAL		
DRAWN:	TJS	12-18-10
CHKD :	TW	12-18-10
DSGN :	XXX	mm-dd-yy
MFG :	DH	12-18-10
QC :	DK	12-18-10

DRAWING SCALE: 5:1

DRAWING NO.	REV
JBXFD0G07MSSDPMRC	A

1 OF 2

PRO-E

THIS DRAWING IS A CONTROLLED DOCUMENT FOR SOURIAU USA, INC.
IT IS SUBJECT TO CHANGE WITHOUT NOTIFICATION.
CONTACT THE ENGINEERING CONTROL CENTER FOR THE LATEST REVISION.

DWG. NO.
JBXFD0G07MSSDPMRC

ELECTRICAL:

EMI SHIELDING : SHIELDED FOR THE RANGE 55dB UP TO 100MHz

INSULATION RESISTANCE : >500MΩ PER ANSI-EIA-364-D METHOD 21

MAX. CURRENT RATING : (SEE TABLE 1) MAXIMUM CURRENT THAT CAN BE APPLIED SIMULTANEOUSLY ON EACH LINE OF THE CONNECTOR MATED PAIR, CONTINUOUSLY DURING ITS LIFE TIME IN NORMAL CLIMATIC CONDITIONS.

CONNECTOR TESTING : VOLTAGE — 680Vrms TEST VOLTAGE IS APPROXIMATELY 75% OF THE DWV VOLTAGE AT NORMAL CLIMATIC CONDITIONS. THIS VOLTAGE CAN BE ACHIEVED SEVERAL TIMES, BUT NOT APPLIED CONTINUOUSLY.

CONNECTOR WORKING : VOLTAGE — 320/220 (Vdc/ Vrms) WORKING VOLTAGE IS APPROXIMATELY 1/3 OF THE TEST VOLTAGE. THIS VOLTAGE IS SUSTAINABLE FOR THE LIFE OF THE CONNECTOR IN ITS WORKING ENVIRONMENT.

PHYSICAL:

MAXIMUM WIRE SIZE USED : 28 AWG

CABLE DIAMETER WITH PLASTIC : Ø1.5mm MIN.
COLLET SET SUPPLIED TO Ø5.5mm MAX.

ENVIRONMENTAL:

ENDURANCE: 1000 CYCLES AS PER MIL-STD 1344A. METHOD 2016.1

SHOCK: 50 g . DURATION 6 ms; AS PER MIL-STD 1344A. METHOD 2004.1

VIBRATIONS: 10 TO 2000Hz γ = 15g. AS PER MIL-STD 1344A. METHOD 2005.1

PROTECTION INDEX: IP 40 AS PER CEI 529

OPERATING TEMPERATURE:
WITH PLASTIC COLLETS: -55°C TO +125°C (-67°F TO +257°F)

WITH OPTIONAL METALLIC COLLETS: -55°C TO +200°C (-67°F TO +392°F)
(ONLY ON REQUEST)

PIN CONTACT

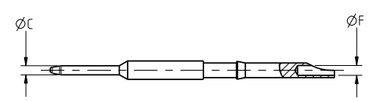

TABLE 1

CONTACT		USABLE CABLES			MAX. CURRENT RATING (A)	CONTACT RESISTANCE (mΩ)
ØC	ØF	CORE SECTION (mm^2) MIN.	CORE SECTION (mm^2) MAX.	AWG		
0.5	0.5	-	0.096	28	5	10

THE INFORMATION CONTAINED IN THIS DRAWING IS CONFIDENTIAL AND MAY NOT BE DISCLOSED WITHOUT WRITTEN CONSENT FROM SOURIAU USA, INC.

LINEAR MEASURE: (INCH) mm (INCH)
THIRD ANGLE PROJECTION

TOLERANCES UNLESS OTHERWISE SPECIFIED

No. OF PLACES	mm (INCH)
WHOLE No.	±0.5 (±.02)
ONE PLACE	±0.2 (±.008)
TWO PLACES	±0.1 (±.004)
ANGLES	±1°

DRAWING TITLE
JBX, SIZE 0, 07 POSITION, MALE STRAIGHT PLUG

CAT NO. **JBXFD0G07MSSDPMR**

CAGE NO: 09922 SIZE: C

CUSTOMER

INTERPRET THIS DRAWING IN ACCORDANCE WITH ASME Y14.5M - 1994.

SOURIAU Connection Technology
www.souriau.com

APPROVAL		
DRAWN:	TJS	12-18-10
CHKD :	TW	12-18-10
DSGN :	XXX	mm-dd-yy
MFG :	DH	12-18-10
QC :	DK	12-18-10

DRAWING SCALE: 5:1

DRAWING NO.	REV
JBXFD0G07MSSDPMRC	A

2 OF 2

PRO-E