THIS DRAWING IS UNPUBLISHED. RELEASED FOR PUBLICATION -,- .
© COPYRIGHT - By - ALL RIGHTS RESERVED.

REVISIONS

P	LTR	DESCRIPTION	DATE	DWN	APVD
	G	REV PER ECO 17-001698	2-14-17	CT	DM

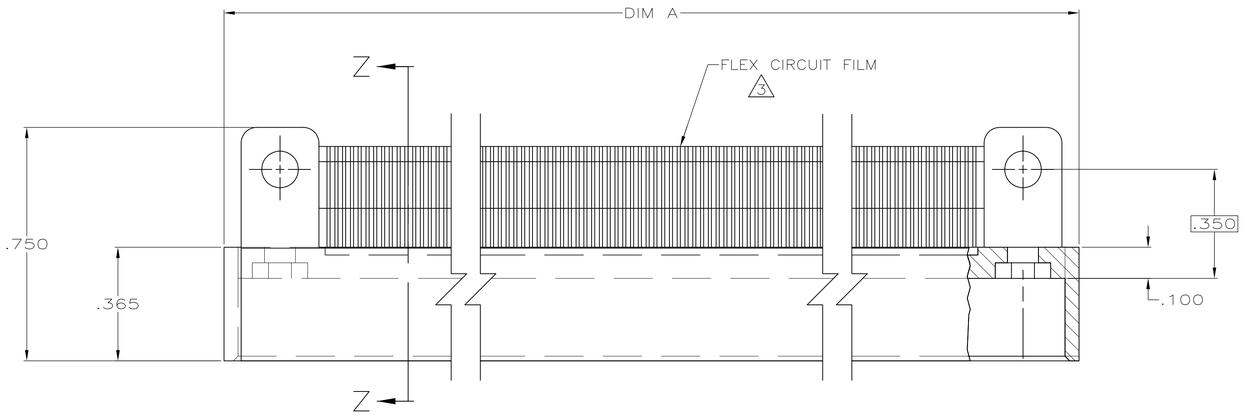

1. TE, PART NUMBER AND DATE CODE MARKED THIS SURFACE.
2. CAVITY I.D. NUMBERS MARKED ON ENDS, THIS SIDE ONLY (SEE TABLE)
3. FLEX CIRCUITS MATERIAL: 3.5 OUNCE (REF) BERYLLIUM COPPER PER QQ-C-530 CONDUCTORS WITH POLYMIDE DIELECTRIC AND ACRYLIC ADHESIVE.
4. SIDE PLATES: STAINLESS STEEL PER QQ-S-763.
5. HOUSING MATERIAL: CRYSTAL POLYMER
   COLOR: GRAY
   CONTACT MATERIAL: COPPER ALLOY
6. EPOXY ADDED TO AREA AROUND FLEX. WILL NOT EXCEED HEIGHT OF BOARD STANDOFF.

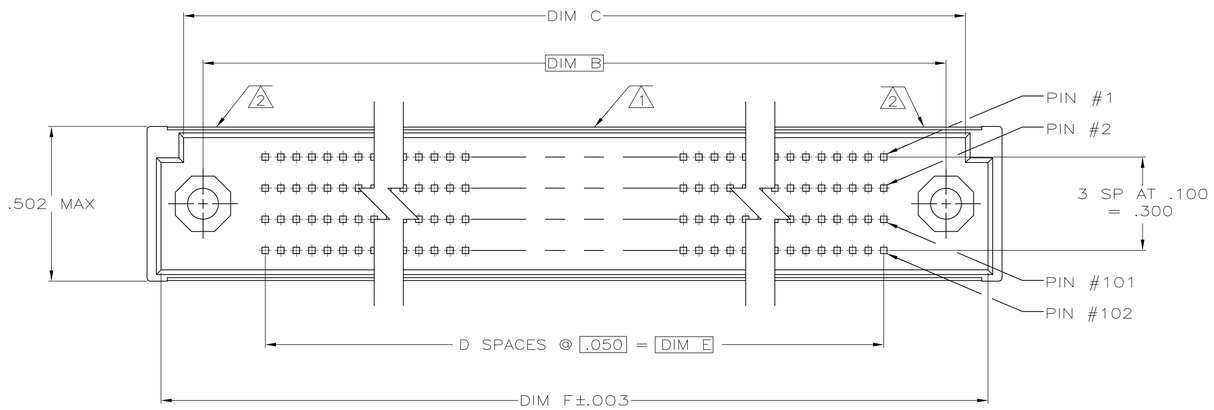

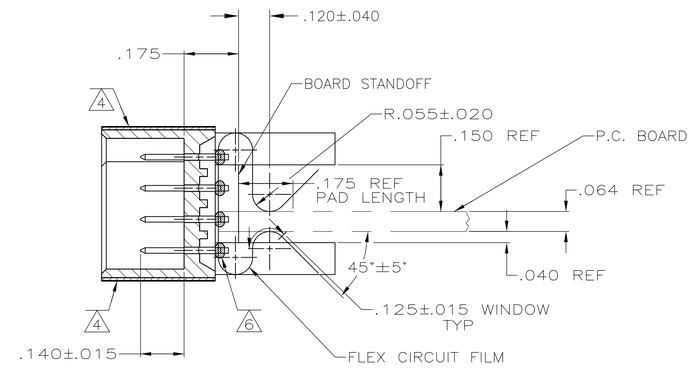

SECTION Z-Z

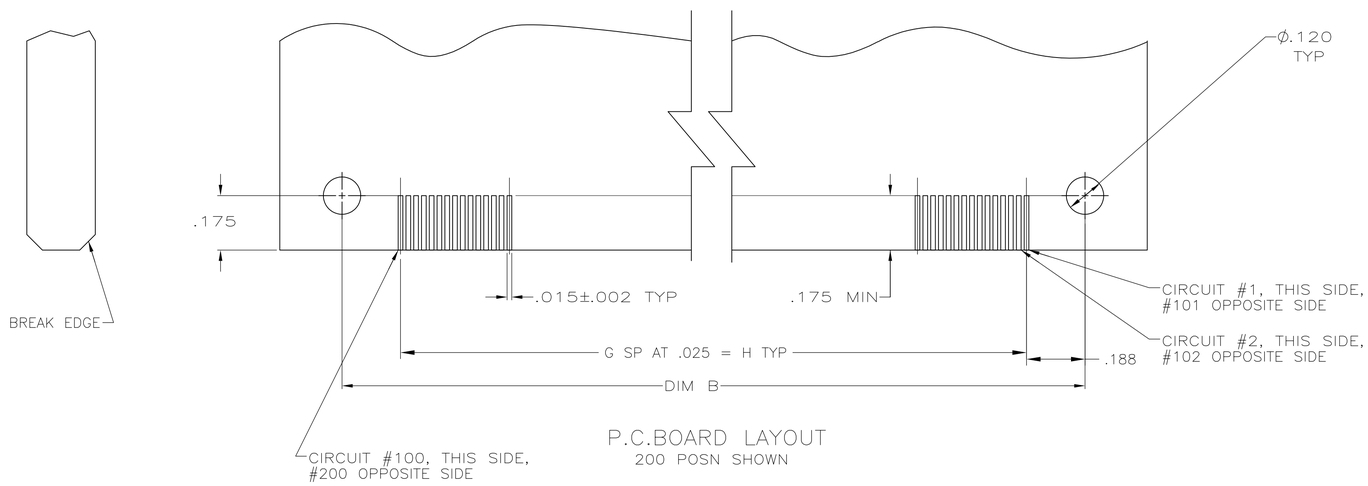

P.C.BOARD LAYOUT
200 POSN SHOWN

CAVITY IDENTIFICATION	DIM H	DIM G	DIM F	DIM E	D	DIM C	DIM B	DIM A	NUMBER OF POSITIONS	PART NUMBER
1 - 150	3.725	149	4.355	3.700	74	4.225	4.100	4.460	300	448446-5
1 - 76	1.875	75	2.505	1.850	37	2.375	2.250	2.610	152	448446-4
1 - 160	3.975	159	4.605	3.950	79	4.475	4.350	4.710	320	448446-3
1 - 100	2.475	99	3.105	2.450	49	2.975	2.850	3.210	200	448446-2
1 - 60	1.475	59	2.105	1.450	29	1.975	1.850	2.210	120	448446-1

THIS DRAWING IS A CONTROLLED DOCUMENT.

DIMENSIONS: INCHES

TOLERANCES UNLESS OTHERWISE SPECIFIED:
0 PLC ± -
1 PLC ± -
2 PLC ± -
3 PLC ± .005
4 PLC ± -
ANGLES ± -

MATERIAL 5

FINISH .000050 MIN GOLD IN

DWN T. ALEXANDER 5-19-92
CHK D. GUTTER 5-19-92
APVD D.GUTTER 5-19-92
PRODUCT SPEC -
APPLICATION SPEC -
WEIGHT 0.000000

TE Connectivity

NAME PIN ASSY 4 ROW MINI-BOX

SIZE A1 | CAGE CODE 00779 | DRAWING NO C-448446 | RESTRICTED TO -

CUSTOMER DRAWING | SCALE 4:1 | SHEET 1 OF 1 | REV G

4805 (1/15)