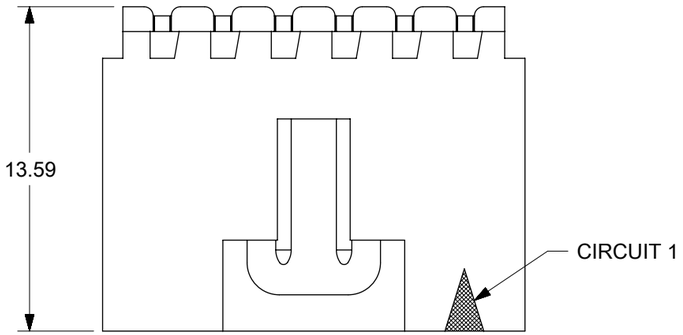

2 CIRCUIT PART

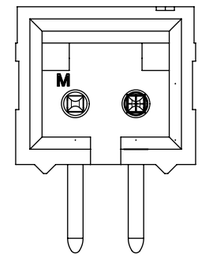

NOTES:

1. HOUSING MATERIAL: LCP, UL94V-0, BLACK
   TERMINAL MATERIAL: BRASS
2. FINISH:
   MATTE TIN - 2.54 MICROMETERS MINIMUM MATTE TIN OVER NICKEL.
   0.38 GOLD - SELECT GOLD IN MATING AREA: 0.38 MICROMETERS MINIMUM
   SELECT MATTE TI IN PC TAIL: 2.0 MICROMETERS MINIMUM
   WITH OVERALL NICKEL UNDERPLATE
   0.75 GOLD - SELECT GOLD IN MATING AREA: 0.75 MICROMETERS MINIMUM
   SELECT MATTE TI IN PC TAIL: 2.0 MICROMETERS MINIMUM
   WITH OVERALL NICKEL UNDERPLATE
3. PRODUCT SPECIFICATION: 1719710000-PS AND PS-70400
4. PACKAGING SPECIFICATION: TUBES PER 1719740000-PK
5. HEADER MATES WITH: OPTION "G" 70400 AND 70430 SERIES SL CONNECTORS
6. COSMETIC SPECIFICATION: PS-45499-002 CLASS B
7. SOLDERABILITY PER SMES-152 LEAD FREE ALLOY

CKTS	A	B
2	7.54	2.54
3	10.08	5.08
4	12.62	7.62
5	15.16	10.16
6	17.70	12.70
7	20.24	15.24
8	22.78	17.78
9	25.32	20.32
10	27.86	22.86
11	30.40	25.40
12	32.94	27.94
13	35.48	30.48
14	38.02	33.02
15	40.56	35.56
16	43.10	38.10
17	45.64	40.64
18	48.18	43.18
19	50.72	45.72
20	53.26	48.26
21	55.80	50.80
22	58.34	53.34
23	60.88	55.88
24	63.42	58.42
25	65.96	60.96

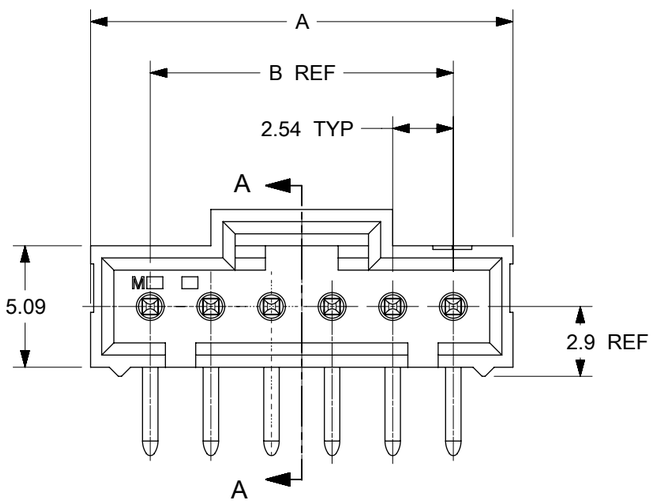

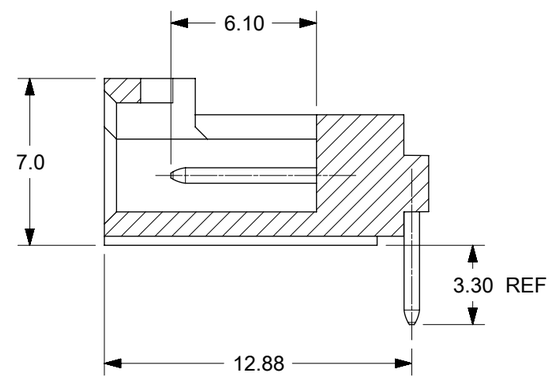

SECTION A-A

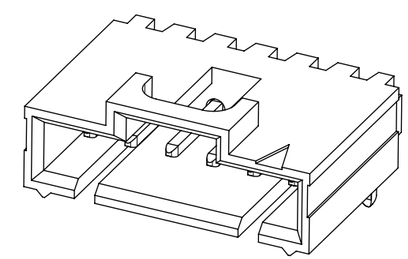

6 CIRCUIT PART SHOWN
SEE CHART FOR OTHER OPTIONS

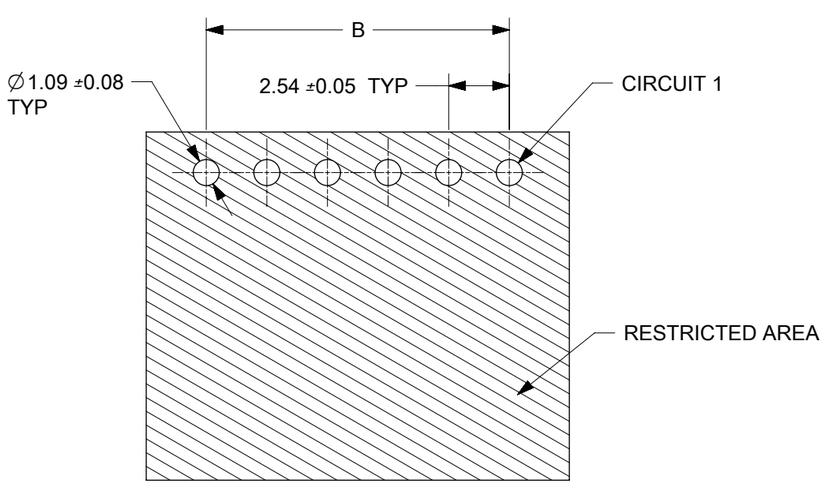

PCB LAYOUT: COMPONENT SIDE
RECOMMENDED PCB THICKNESS: 1.57

SYMBOLS	
E/A	= 0
E/C	= 0
E/B	= 0
S	= 0
▼	= 0
C	= 0
☒	= 0
■	= 0
V	= 0

THIS DRAWING CONTAINS INFORMATION THAT IS PROPRIETARY TO MOLEX ELECTRONIC TECHNOLOGIES, LLC AND SHOULD NOT BE USED WITHOUT WRITTEN PERMISSION

DIMENSION UNITS	SCALE
mm	4:1

GENERAL TOLERANCES (UNLESS SPECIFIED)

ANGULAR TOL	±	0.5 °
4 PLACES	±	
3 PLACES	±	
2 PLACES	±	0.25
1 PLACE	±	0.38
0 PLACES	±	0.0

DRAFT WHERE APPLICABLE MUST REMAIN WITHIN DIMENSIONS

CURRENT REV DESC: RELEASED TO MARKET

EC NO: 174680
DRWN: KSAMIEC 2018/04/04
CHK'D: MKIPPER 2018/04/09
APPR: FSMITH 2018/04/11

INITIAL REVISION:
DRWN: KSAMIEC 2016/08/30
APPR: FSMITH 2016/10/03

THIRD ANGLE PROJECTION | DRAWING: B-SIZE | SERIES: 171974

molex

SL RTAN HEADER ASSY TH NO PEGS

PRODUCT CUSTOMER DRAWING

DOCUMENT NUMBER	DOC TYPE	DOC PART	REVISION
1719740000-SD	PSD	000	A6

MATERIAL NUMBER	CUSTOMER	SHEET NUMBER
SEE CHART	GENERAL MARKET	1 OF 2

DOCUMENT STATUS	P1	RELEASE DATE	2018/04/11 17:49:55

FORMAT: master-B-prod
REVISION: H
DATE: 2018/01/18

CIRCUIT SIZE	TIN MATERIAL NUMBER	0.38 GOLD MATERIAL NUMBER	0.75 GOLD MATERIAL NUMBER
2	171974-0002	171974-0102	171974-0202
3	171974-0003	171974-0103	171974-0203
4	171974-0004	171974-0104	171974-0204
5	171974-0005	171974-0105	171974-0205
6	171974-0006	171974-0106	171974-0206
7	171974-0007	171974-0107	171974-0207
8	171974-0008	171974-0108	171974-0208
9	171974-0009	171974-0109	171974-0209
10	171974-0010	171974-0110	171974-0210
11	171974-0011	171974-0111	171974-0211
12	171974-0012	171974-0112	171974-0212
13	171974-0013	171974-0113	171974-0213
14	171974-0014	171974-0114	171974-0214
15	171974-0015	171974-0115	171974-0215
16	171974-0016	171974-0116	171974-0216
17	171974-0017	171974-0117	171974-0217
18	171974-0018	171974-0118	171974-0218
19	171974-0019	171974-0119	171974-0219
20	171974-0020	171974-0120	171974-0220
21	171974-0021	171974-0121	171974-0221
22	171974-0022	171974-0122	171974-0222
23	171974-0023	171974-0123	171974-0223
24	171974-0024	171974-0124	171974-0224
25	171974-0025	171974-0125	171974-0225

THIS DRAWING CONTAINS INFORMATION THAT IS PROPRIETARY TO MOLEX ELECTRONIC TECHNOLOGIES, LLC AND SHOULD NOT BE USED WITHOUT WRITTEN PERMISSION

SYMBOLS: = 0 (A) = 0 (C) = 0 (E) = 0 (S) = 0 ▼ = 0 (C) = 0 ☒ = 0 ■ = 0 (D) = 0

DIMENSION UNITS	SCALE
mm	1:1

GENERAL TOLERANCES (UNLESS SPECIFIED)

ANGULAR TOL	±	0.5 °
4 PLACES	±	
3 PLACES	±	
2 PLACES	±	0.25
1 PLACE	±	0.38
0 PLACES	±	0.0

DRAFT WHERE APPLICABLE MUST REMAIN WITHIN DIMENSIONS

CURRENT REV DESC: RELEASED TO MARKET

EC NO: 174680
DRWN: KSAMIEC 2018/04/04
CHK'D: MKIPPER 2018/04/09
APPR: FSMITH 2018/04/11

INITIAL REVISION:
DRWN: KSAMIEC 2016/08/30
APPR: FSMITH 2016/10/03

THIRD ANGLE PROJECTION | DRAWING: B-SIZE | SERIES: 171974

molex

SL RTAN HEADER ASSY TH NO PEGS

PRODUCT CUSTOMER DRAWING

DOCUMENT NUMBER	DOC TYPE	DOC PART	REVISION
1719740000-SD	PSD	000	A6

MATERIAL NUMBER	CUSTOMER	SHEET NUMBER
SEE CHART	GENERAL MARKET	2 OF 2

DOCUMENT STATUS	P1	RELEASE DATE	2018/04/11 17:49:55

FORMAT: master-B-psd
REVISION: H
DATE: 2018/01/18