THIS DRAWING IS UNPUBLISHED. RELEASED FOR PUBLICATION -,- .
© COPYRIGHT - By - ALL RIGHTS RESERVED.

LOC	DIST
—	—

REVISIONS

P	LTR	DESCRIPTION	DATE	DWN	APVD
	N	REVISED PER ECR-12-013445	27OCT12	KH	PD

1 CONTINUOUS STRIP ON REELS

2 PRELIMINARY - NOT FOR PRODUCTION

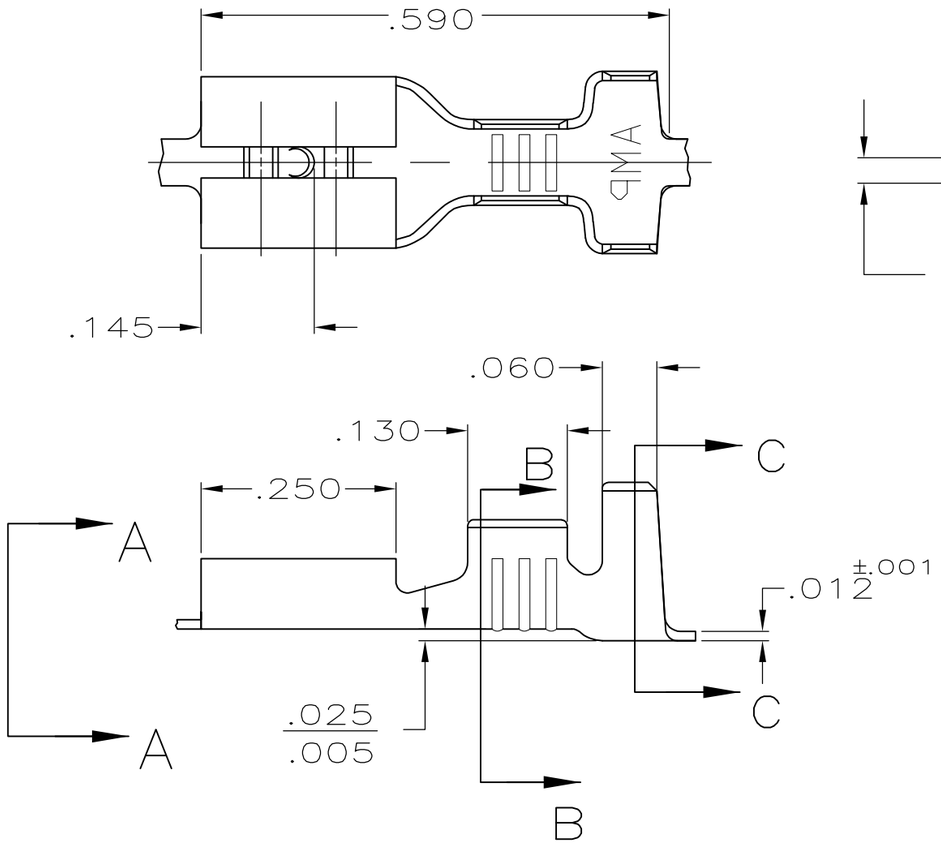

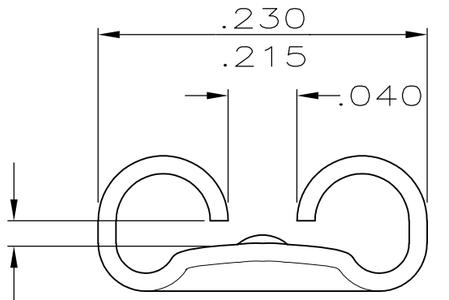

FITS .187 SERIES FASTON TAB

VIEW A-A
SCALE 8:1

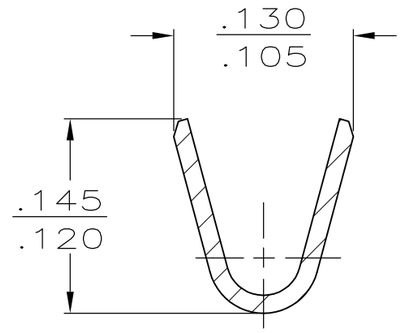

SECTION B-B
SCALE 8:1

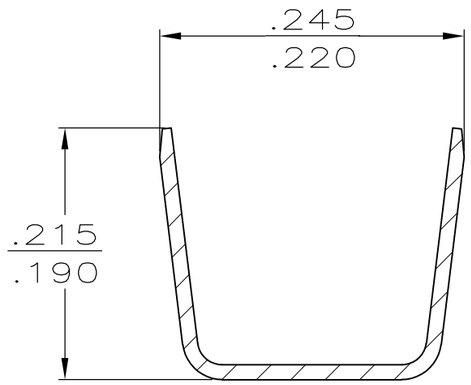

SECTION C-C
SCALE 8:1

NICKEL	T2 STEEL	.105-.210 OR (2) .105 MAX	18-16 OR (2) #18's	.020	2 60487-3
TIN	BRASS				60487-2
—					60487-1
FINISH	MATERIAL	INSULATION RANGE	WIRE SIZE	MATING TAB THK ±.001	PART NO

F	.210	.188	F	.100	—	—
					.055	16
					.049	18
TYPE	WIDTH	STRIP LENGTH ±.015	TYPE	WIDTH	±.002 HEIGHT	WIRE
INSUL BARREL CRIMP		WIRE BARREL CRIMP				

THIS DRAWING IS A CONTROLLED DOCUMENT.

DIMENSIONS: INCHES

TOLERANCES UNLESS OTHERWISE SPECIFIED:

0 PLC	± -
1 PLC	± -
2 PLC	± -
3 PLC	± .015
4 PLC	± -
ANGLES	± -

MATERIAL: SEE TABLE

FINISH: SEE TABLE

DWN JR RUTH 7/14/89
CHK MS FEHER 7/14/89
APVD — -
PRODUCT SPEC —
APPLICATION SPEC —
WEIGHT —

TE Connectivity

NAME: RECEPTACLE, FASTON, .187 SERIES — —

SIZE	CAGE CODE	DRAWING NO	RESTRICTED TO
A3	00779	C-60487	—

CUSTOMER DRAWING | SCALE 5:1 | SHEET 1 OF 1 | REV N