THIS DRAWING IS UNPUBLISHED. RELEASED FOR PUBLICATION – , – .
© COPYRIGHT – By – ALL RIGHTS RESERVED.

REVISIONS

P	LTR	DESCRIPTION	DATE	DWN	APVD
	K4	REVISED PER ECO–15–016493	28NOV2015	NK	DR
	K5	REVISED PER ECO–17–016703	02APR2018	RS	DR

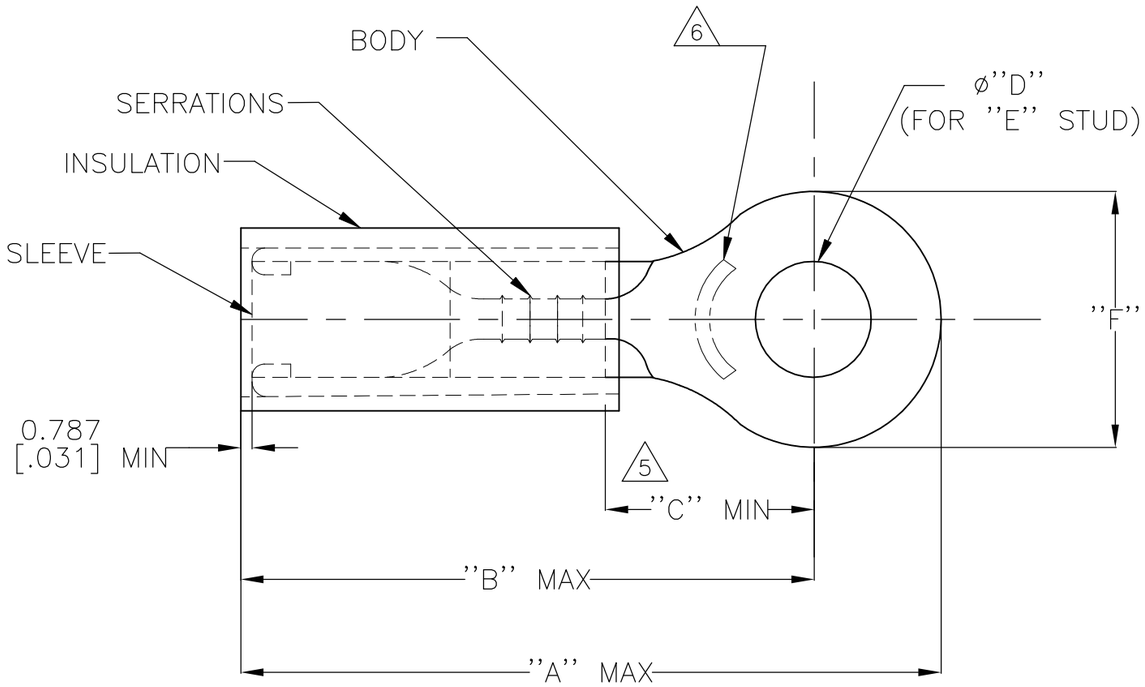

1 BODY: COPPER ASTM B152
GOLD PL ASTM B488 TYPE 1, CODE C
0.0012[.00005] MIN EXT THK OVER NICKEL PLATE
SAE AMS QQ–N–290 0.00076 [.00003] AVG THK
SLEEVE: COPPER ASTM B152
NICKEL PL SAE AMS QQ–N–290
0.00076 [.00003] AVG EXT. THK

2 FOR 2.032[.080] TO 3.810[.150] WIRE INSULATION DIA.

3 BODY MATERIAL THK: 0.787±0.051 [.031±.002]

4 NOTE DELETED

5 DIMENSION APPLIES FROM EDGE OF METAL WIRE BARREL TO CENTER OF STUD HOLE

6 STAMP ''AMP 14'' APPROX AS SHOWN

PART NO.	"A"	"B"	"C"	"D"	"E"	"F"
1–332438–0	17.856 [.703]	14.605 [.575]	4.343 [.171]	3.683±0.076 .145±.003	M3.5 [#6]	6.350 [.250]

QTY	PACKAGE TYPE	PART NO.	INSULATION MATERIAL
1000	LOOSE PIECE	1–332438–0	PTFE (ASTM D3295) COLOR: WHITE

AMP INCORPORATED
CUSTOMER SERVICE SYSTEMS

FOR ADDITIONAL PRODUCT INFORMATION OR COPIES OF DRAWINGS AND TECHNICAL DOCUMENTS	PRODUCT INFORMATION CENTER 1–800–522–6752
FOR APPLICATION TOOLING INFORMATION	TOOLING ASSISTANCE CENTER 1–800–722–1111
FOR ORDER ENTRY	1–800–526–5142

MAX RECOMMENDED OPERATING TEMPERATURE: 260°C [500°F]
VOLTAGE RATING: 300V MAX
CIRCULAR MIL AREA: 2.15mm²[4,234] STRANDED WIRE ONLY

THIS DRAWING IS A CONTROLLED DOCUMENT.

DIMENSIONS: mm [INCHES]

TOLERANCES UNLESS OTHERWISE SPECIFIED:
0 PLC ± –
1 PLC ± –
2 PLC ± –
3 PLC ± 0.127[.005]
4 PLC ± –
ANGLES ± 5°

MATERIAL 1 SEE TABLE
FINISH 1 SEE TABLE

DWN	NAGALAKSHMI K	01DEC2015
CHK	MERCURIO MAURIZIO	01DEC2015
APVD	MERCURIO MAURIZIO	01DEC2015
PRODUCT SPEC	—	
APPLICATION SPEC	—	
WEIGHT		

TE Connectivity Ltd.

NAME: WIRE TERMINAL
PIDG, STRATO–THERM, RING TONGUE
WIRE SIZE:14 AWG

SIZE	CAGE CODE	DRAWING NO	RESTRICTED TO
A3	00779	C–332438	—

CUSTOMER DRAWING | SCALE NTS | SHEET 1 OF 1 | REV K5

1470–19 (1/15)